Issue 24.03

AQUACELL STATIONARY WASTEWATER SAMPLERS S300 SERIES

USER GUIDE

Sira MC 050059

Wastewater Samplers for the World

SECTIONS

Warranty

Contents of Package 1

Introduction 2

Installation 3

Operation 4

Maintenance 5

Technical Specification 6

AQUAMATIC PRODUCT WARRANTY & BASIC TERMS OF SUPPLY

Congratulations on choosing an Aquamatic product. When used and maintained properly, this equipment should provide many years of reliable service

As a mark of confidence each new Aquamatic product is supplied with the following 12 month Warranty:

> Electrical and / or mechanical defects occurring during the 12 months from date of invoice will be rectified free of charge provided the defective item is returned carriage paid to the supplier during this 12 month period (see MAINTENANCE section for details of returns procedure)

Please read this User Guide carefully, as neither Aquamatic Ltd. nor its agents accept responsibility for any damage or defect caused by misuse, abuse, neglect or incorrect operation

Aquamatic products and equipment are NOT suitable for use in areas classified as hazardous zones. Aquamatic products are subject to continuous development and improvement. Components and specifications may change or be withdrawn without notice

One copy of this 'User Guide' is provided with your Aquamatic product. This is intended to assist the reader in the effective application of the product and although the information contained is given in good faith, Aquamatic Ltd. accepts no responsibility or liability for any loss or damage arising from the use of information provided or from information being omitted

In any event Aquamatic Ltd accepts no liability for any consequential loss or damage arising from the use or failure of the product or any information provided, including, but not limited to, economic or financial loss, damage to peripheral equipment or products, loss of use, productivity or time

All equipment is supplied subject to Aquamatic Standard Terms & Conditions of Sale, this will be supplied with each order acknowledgment, and is also downloadable from the Aquamatic website or can be emailed, on request, from the Aquamatic head office

1 CONTENTS OF PACKAGE

Congratulations on buying your new Aquacell Wastewater Sampler!

Before using your Sampler please check carefully that the contents of the package match your delivery note and in turn the items specified on your purchase order

Transit damage, or discrepancies, should be reported to Aquamatic immediately. If transit damage is not reported within **48 hours**, transit insurance will be invalidated and the cost of repair will be chargeable

NOTES

- Whilst awaiting installation your S300 Series Sampler should remain in its original packaging and kept in a dry, heated (min 5°C) area
- During periods of time where your S300 Series Sampler will be powered off then it should be kept in a dry, heated (min 5°C) area

Samplers **1.3**

Sample Collection Vessels **1.3**

Optional Equipment - Electrical **1.5**

Optional Equipment - Mechanical **1.5**

Samplers

With All Aquacell S300 Series Sampler Models

Intake Hose Anchor

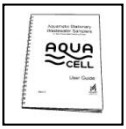

User Guide

Intake Hose Clip

Spare Volume Control Tube

Intake Hose with Filter 10 metre

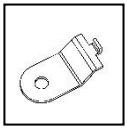

Mounting Foot – S300 x 4 (used to fix the Sampler to the pallet for transport)

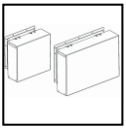

Air Cowls

Sample Collection Vessels

Single Container Options

2.5 litre HDPE Bottle

CL-3124

5 litre HDPE Container

CL-3123

10 litre HDPE Bottle

CL-3122

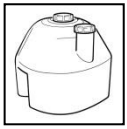

25 litre Container

CL-3001

Bottler Options

Removable Bottlers

2 x 4.5 litre Self-Emptying Polypropylene

CL-3006

12 x 0.75 litre Glass

CL-3002

4 x 5 litre HDPE

CL-3008

24 x 1 litre HDPE

CL-3004

12 x 1 litre PET

CL-3003

Integral Bottlers

2 x 4.5 litre Self-Emptying Polypropylene

CL-3108

Partial Internal Part

4 x 10 litre HDPE

CL-3119

2 x 4.5 litre Self-Emptying Self-Cleaning Polypropylene
CL-3121

Partial Internal Part

8 x 2.8 litre HDPE

CL-3120

Partial Internal Part

2 x 5 litre HDPE

CL-3114

Partial Internal Part

12 x 1 litre HDPE

CL-3111

Partial Internal Part

4 x 5 litre HDPE

CL-3110

Partial Internal Part

12 x 1 litre Glass

CL-3112

Optional Equipment - Electrical

Partial Internal Part

Ancillary Signal Connection – S300 Series
CL-4087.2 / 4088.2

Partial Internal Part

Back-Up Battery inc Float Charger – S300 Series

CL-4109

Beacon – S300 Series

CL-4122

Partial Internal Part

Bottler Connection – S300 Series

CL-4110

Data Connection

CL-4006.2

Pressurised Pipeline Interface – S300 Series

CL-4120-volts / hz

Partial Internal Part

Interior Lighting – S300 Series

CL-4111

Partial Internal Part

Sample Temperature Monitoring – S300 Series

CL-4103.2

Optional Equipment - Mechanical

Auxiliary Equipment Enclosure – S300 Series

CL-4117

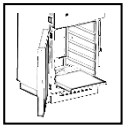

Pull Out Tray – Supplement – S300 Series Included with all S300 Integral Bottlers
CL-4115

Sampler Inspection Window – Supplement – S300 Series
CL-4132.2

Security Padlock – All Weather

CL-4055.2

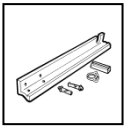

Intake Hose Support Bracket Kit

CL-4010

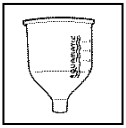

Sample Chamber – Glass - Supplement

CL-7077

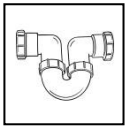

Wastewater Drain – S300 Series

CL-4102

2 INTRODUCTION

Safety First **2.3**
Infection
Electrical
Mechanical
This User Guide **2.4**
The Sampling Process **2.4**
The Aquacell S300 Series Model Range **2.5**
S300 Series Models - For OUTDOOR applications – S310H & S320H
Sample Collection Vessels **2.5**
Single Containers
Bottlers
Optional Equipment **2.7**
Ancillary Signals
Auxiliary Equipment Mounting Plate
Auxiliary Equipment Enclosure
Beacon
Pressurised Pipeline Interface
Sample Temperature Monitoring
Wastewater Drain
Security **2.8**

Safety First

Infection

All Aquacell Wastewater Samplers and their associated Sample Collection Vessels have been designed to minimise the risk of operator contact with the potentially hazardous wastewater medium, however great care should always be exercised when working in close proximity to wastewater. Particular attention should be paid to the following points:

1. Always wear appropriate PPE for the types of effluent being sampled
2. Wash hands thoroughly after handling contaminated sampler parts
3. Do not allow wastewater to come into contact with any open wounds or skin abrasions
4. If any glass has become cracked or chipped replace immediately to avoid the risk of cuts

Electrical

The S300 Serial Sampler is mains powered only and receives its power directly from the AC mains supply. Provision for and connection of an appropriate power supply must be carried out by a suitably qualified electrician to the isolation switch on the outside of the S300 cabinet, see 'Installation Section' for further details

Once correctly installed all mains connections on the equipment are safely housed behind fixed covers and contact with dangerous voltages is avoided. Always check the integrity of the mains cables/connectors before and during use

Mechanical

Appropriate lifting equipment should be used and correct lifting procedures followed when manoeuvring the S300 Series into position

Care should be taken, whilst the Sampler is in operation, to avoid trapping fingers in the Pinch Valve Assembly, whilst this does not pose a serious injury risk it could cause some discomfort

The Sampler can be supplied with a Glass Sample Chamber and Glass Sampler Collection Vessels, if this is the case care should be taken when handling as these can be very slippery when wet

This User Guide

The Aquacell sampling system is designed for ease of operation and maintenance. If followed carefully the instructions given in this guide should quickly enable you to assemble, program and deploy your new Aquacell Sampler and start to benefit from the collection of truly representative samples of your wastewater

This User Guide relates to all 4 models in the Aquacell S300 Series Range. Much of the information supplied applies equally to all formats, however, where information relates to a specific format, Sample Collection Vessel or Optional Equipment then this will be stated

The Sampling Process

An Aquacell Wastewater Sampler extracts individual Sample Shots from a wastewater channel or vessel according to a predetermined program and deposits them into one or more Sample Collection Vessels. In this way the user is provided with a representative sample of the wastewater being discharged

The benefits of using a Sampler to automatically collect volumes (also known as aliquots) of your wastewater are varied but include:

- Reduce the pollution load of the discharge (to fall within consent limitations)
- Reducing water company effluent charges
- Reducing product wastage

Following collection the way in which the samples are processed will vary from application to application. For example samples can be:

- Analysed using in-house laboratory facilities – when the objective of taking samples is to gain a greater knowledge of the discharge profile
- Sent to a specialist analytical laboratory for analysis - when an independent assessment of the discharge is required
- Made available to the local Water Company as a source of data on which to base charges. Self-monitoring is being increasingly encouraged by water companies both in the interests of accurate charging and to encourage dischargers to improve plant efficiency, and so reduce the pollution load of their discharge

The Aquacell S300 Series Model Range

The Aquacell S300 Series is a range of floor mounted automatic Wastewater Samplers, based on a high performance cabinet and incorporating the Aquacell Sampler Module. The Sampler Module is panel mounted in the upper section of the cabinet. The lower section of the cabinet is the Sample Container Housing. The Sample Container Housing is highly insulating and has a lockable front door

As with all Aquamatic Samplers each of these models is compliant with the UK Environment Agencies MCERTS standard for Automatic Wastewater Sampling Equipment.

The Aquacell S300 Series comprises two variants as follows:

S300 Series Models - For OUTDOOR Applications

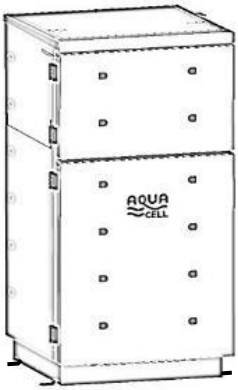

Aquacell S310H

- Does NOT include Sample Refrigeration
- Includes Sample Frost Protection
- The Sampler module is enclosed behind a lockable Upper P
- Suitable ambient temperatures -10˚C to +40˚C

Aquacell S320H

- Includes Sample Refrigeration
- Includes Sample Frost Protection
- The Sampler module is enclosed behind a lockable Upper P
- Suitable ambient temperatures -10˚C to +40˚C

Sample Collection Vessels

Once a sample has been taken it needs to be stored whilst awaiting collection by the user. For this reason all the models in the Aquacell range can be supplied with a variety of Sample Collection Vessels

Single Containers

In many applications a single composite sample is all that is required. For these situations Aquamatic offer a range of single container Sample Collection Vessels, all of which incorporate a sealed lid / cap and easy clean design

Bottlers

When a more detailed look at your wastewater profile is required it is often necessary to distribute collected samples into separate containers, each representing a specific time period or number of samples. For these situations Aquamatic provide a wide range of multi-bottle Sample Collection Vessels. These types of Sample Collection Vessels can be provided in two basic formats, Removable and Integral

Removable Bottlers

Apart from the pluggable connection cable, Removable Bottlers are fully independent from the Aquacell Sampler unit. As such the complete Bottler (including distribution mechanism and bottles) can be removed from the Sampler. This is particularly useful when there is the need to remove a full set of Bottles for analysis

Integral Bottlers

Designed only for use with the Aquacell S300 Series, Integral Bottlers have parts such as the Sample Distribution Mechanism (non Self-Emptying only) or a Wastewater drain (Self-Emptying only) which are integrated into the S300 Series Cabinet itself. As such, it is only the Sample Bottles themselves that can be removed from the Sampler (which in many cases is all that is required). All Integral Bottlers are supplied with a convenient Pull-Out Tray

Self-Emptying Bottlers

There are two versions of the Self-Emptying available:

Standard (available in Removable and Integral formats)
2 Containers diametrically opposed are filled in turn. Each Container is tipped, emptied and righted as the Distributor Pipe moves towards it in order to accept the next Sample(s). This Bottler is useful where the samples from a previous sampling period (e.g. day) is can be retained whilst the current periods samples are being collected, therefore meaning the previous periods samples are always available for analysis if required.

Self-Cleaning (available in Integral format only)
As per the 'Standard' version above, plus Container cleaning. Water spray heads are attached to opposite walls of the Container housing. After a Container has tipped and emptied its contents a diffused water spray washes out residues from the previous sample. This version requires a suitable pressurised wash-water supply connected to the rear of in the Sampler

Optional Equipment

Ancillary Signal Connection

Required when connecting Sampler to auxiliary equipment. When connected to appropriate flow monitoring equipment, this connection enables the Sampler to extract sample on a flow proportional basis. Accepts flow input (4-20mA or volt-free contact closure) and Remote Control input. Additionally this connection can provide Sample Acquired and Sampler Warning outputs

Auxiliary Equipment Enclosure

The S300 Series can be used to mount / house additional auxiliary equipment such as flow metre control heads, data loggers etc. The Auxiliary Equipment Enclosure is designed to provide this facility. The Enclosure incorporates a fused power supply with / signals provision for connection to the auxiliary equipment. The Enclosure is suitable for use with the S310H and S320H in outdoor locations. Supplied with 2 keys

Beacon

The optional Beacon can provide a visual indication of the S300 Samplers current status. This rear mounted, LED type, 2 colour Beacon will react to the Samplers current activity and express this in a sequence of bulb flashes. See Installation section for details

Interior Lighting – S300 Series

Dual switchable LED lights providing additional illumination in both the Sampler and Lower Compartment zones

Pressurised Pipeline Interface

The Pressurised Pipeline Interface (PPI) works in conjunction with any of the Aquacell Sampler range. Providing an interface between the Sampler and a pressurised Sampling Point, the PPI gives the Sampler the ability to extract representative samples from pipelines under pressure. Further information on the PPI should be found in the User Guide Supplement titled ‘Pressurised Pipeline Interface’

Sample Temperature Monitoring

All S300 Series Models can be supplied with the facility to monitor collected Sample Temperatures. The temperature (including the corresponding time and date) of the composite sample is recorded every 5 minutes commencing immediately after the first programmed sample is attempted

Sample temperature data can be outputted to a suitable computer or hand held device via the optional Data Connection, details of how to set this up can be found in Section ‘Operation’ sub-section ‘Programming’

Wastewater Drain (standard with Self-Emptying Bottlers)

When supplied, this drain is fitted to the rear of the lower compartment and provides a useful discharge point for surplus samples, accidental spillage etc. This drain is supplied as standard with all Self-Emptying Bottlers. Samplers specified with a 2 x 4.5 litre Self-emptying Integral Bottler are supplied with a Wastewater Drain

The Self Emptying Bottler drain outlet and the Wastewater Drain outlet are connected to a P-Trap using the compression fittings supplied as shown on the following below:

Picture showing the Wastewater Drain installed with the Self-Emptying drain 'T'd in from above

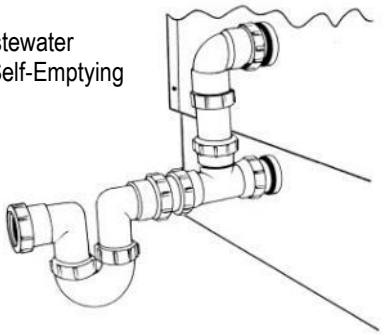

When a Wastewater Drain is ordered the S300 Sampler is fitted with a special deep base which raises the overall height of the Sampler by 150mm. This is necessary in order to incorporate the Wastewater Drain's 'P-Trap' which will prevent cold air leaking from the Sampler's lower compartment and also provides a screen against intrusion from insects etc.

Note: Where possible the 'P-Trap' section of a Wastewater Drain should be fitted in a temperature controlled area, this will avoid freezing of the 'trapped' effluent and possible damage to the Sampler. Where this is not possible additional trace heating maybe required to ensure continuous operation of the equipment

Security

Both the Aquacell S310H and S320H have independently lockable Lower Compartment and Upper Protection Door. Both doors can be secured using the optional Security Padlock – All Weather (CL-4055)

3 INSTALLATION

Choosing a Site **3.3**
Environmental Considerations

Positioning and Securing the Sampler **3.4**
S300 Series Sampler

Power **3.8**
Electrical Mains Power Supply

Installing the Intake Hose and Setting Shot Volume **3.10**

Sample Collection Vessels **3.13**
Single Containers / Removable Bottlers
Integral Bottlers
Self-Emptying Bottlers
Self-Emptying Self-Cleaning Bottlers

Connecting Optional Equipment **3.15**
Ancillary Signal Connection
Auxiliary Equipment Enclosure
Beacon
Mains Connection with Back-Up Battery with Float Charger
Pressurised Pipeline Interface
Wastewater Drain
Self-Emptying Self-Cleaning Bottler

Choosing a Site

Aquacell Wastewater Samplers are NOT suitable for use in areas classified as hazardous zones

Unless specified with an optional Pressurised Pipeline Interface all Aquacell Wastewater Samplers are only suitable for use on non-pressurised sampling points

Whilst awaiting installation your S300 Series Sampler should remain in its original packaging and kept in a dry, heated (min 5°C) area

During periods of time where your S300 Series Sampler will be powered off then it should be kept in a dry, heated (min 5°C) area

Environmental Considerations

See Technical Specification (Section 6) for details of IP Ratings and Ambient Operating Temperature ranges

S310H and S320H Samplers are both suitable for indoor and outdoor sites

Samplers should be stood on a substantial flat surface. They should be located as close as possible to the sampling point and ideally at a level such that the bottom of the Sample Chamber Pinch Valve Tube is always above top water level of the liquid from which the samples are to be taken. Failure to do this, in a power outage or equipment malfunction situation, may result in the source effluent being siphoned through the Sampler and into the Sample Collection Vessel. See 'Installing the Intake Hose' sub-section later in this Section

For outdoor installations, consideration should be given to the possibility that solar radiation could cause the Sampler to rise above its specified maximum temperature. If this might occur, then additional solar screening should be provided

NOTE: Depending on the Intake Hose installation, residual liquid may remain in the Intake Hose between samples. As such, for applications where freezing ambient temperatures are likely to be encountered trace heating of this Hose may be necessary

Positioning and Securing the Sampler

The Sampler should be installed as close to the Sampling Point as possible to minimise the potential for cross-contamination between successive samples

NOTE: When manoeuvring a refrigerated S320H Sampler it is important to ensure that it is not tipped beyond 10 degrees from vertical, failing to do this can cause permanent damage to the Samplers refrigeration system

NOTE: For the purposes of Servicing and Maintaining your S300 Series Sampler, provision should be made for engineer access to all sides and from above the cabinet

1. A flat surface is required on which to mount the Sampler (typically 100mm thick concrete pad)
2. Move the Sampler on its wooden pallet to a position close to the prepared location
3. Remove the transit bolts attaching the Sampler Retaining Feet to the pallet
4. Unhook the Sampler Retaining Feet from the slots in the Sampler Base, retain for later use
5. Carefully remove the Sampler from its pallet and position it on the prepared base
6. Insert the 4 Sampler Retaining Feet (two each side) into the slots in the side of the Sampler Base as shown:

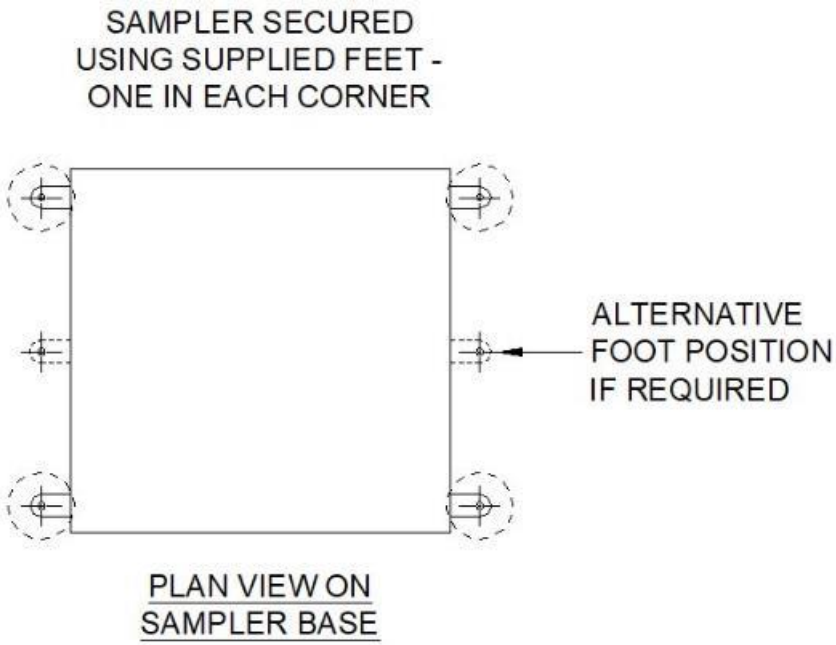

7. Fasten the Sampler down onto the chosen surface using suitable fixing screws
8. Attach the 2 x Air Cowls to the rear of the cabinet using the fixing screws provided
9. Install the Intake Hose as detailed in sub-section ‘Installing the Intake Hose’ later in this section
10. Set the Sample Shot Volume as detailed later in this section
11. If being used, connect auxiliary equipment to the optional Ancillary Signal Connection as detailed later in this section
12. If supplied, connect up the gravity drain to the Condensate Drain outlet / Wastewater Drain outlet
13. If fitted, ensure the Back-Up Battery switch is set to the 'disconnected' position
14. If supplied, connect the optional Auxiliary Equipment Enclosure as detailed later in this section

NOTE: For S320H Samplers, allow to stand for at least 2 hours before first switching on, in order for the refrigerant to settle after installation

Aquacell S300 Series Installation Drawing – Front, Left & Top Views

NOTE 1 -
SAMPLERS FEATURING A WASTEWATER DRAIN OR A SELF-EMPTYING BOTTLER ARE FITTED WITH A DEEP BASE WHICH ADDS 150mm TO THE HEIGHT OF THE INTAKE LEVEL AND TO THE OVERALL HEIGHT OF THE CABINET

NOTE 2 - USING (OPTIONAL) PADLOCK

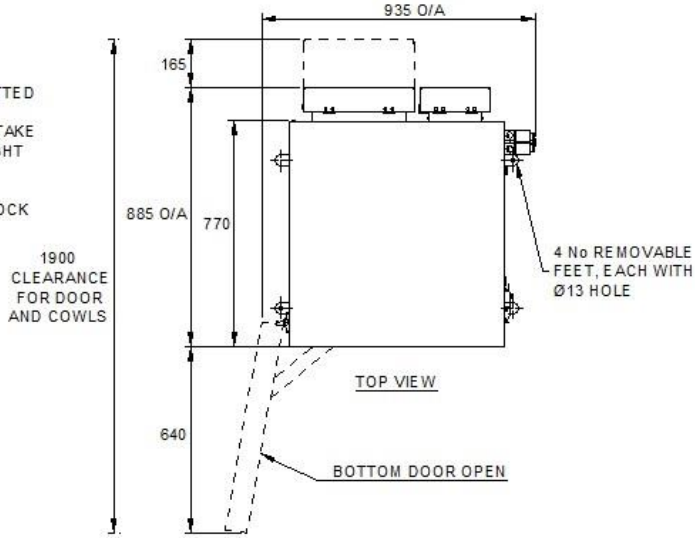

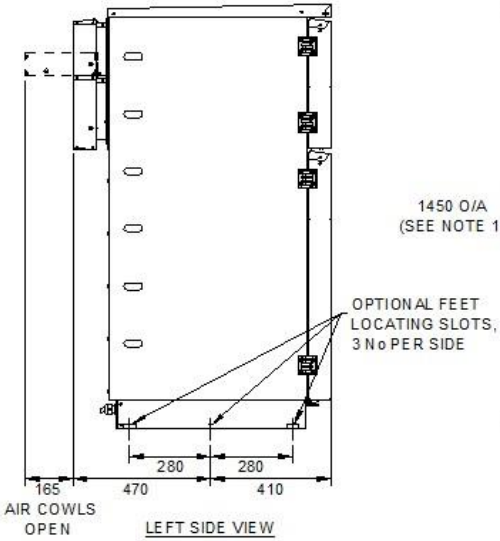

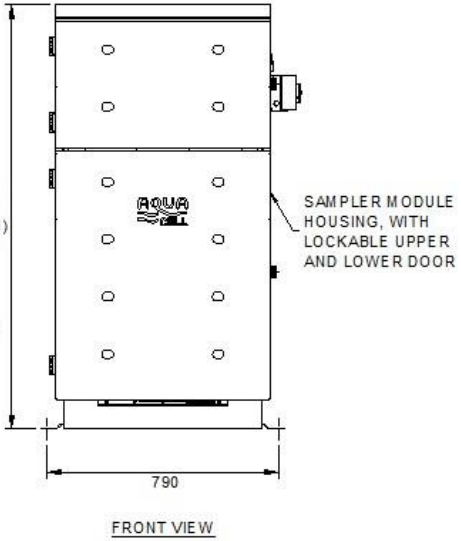

Aquacell S300 Series Installation Drawing – Rear & Right Views

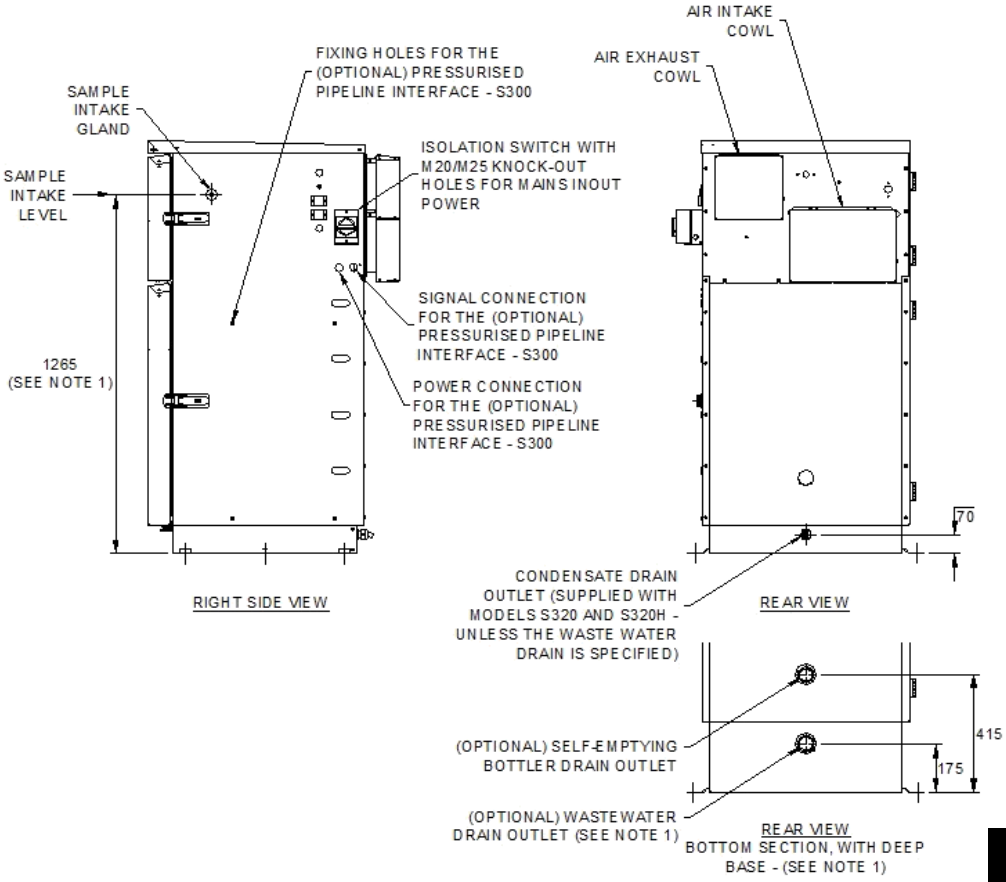

Power

Electrical Mains Power Supply

A suitable electrical supply should be provided to the equipment, see 'Technical Section' for further details. Provision for and connection of an appropriate power supply must be carried out by a suitably qualified electrician

S300 Series Samplers are provided with an 'all pole' switch (live and neutral conductors) on the exterior of the cabinet body

As the equipment is intended to go in potentially wet areas it is advisable to fit an RCD or RCBO (GFI/GFCI) in the circuit to protect operators from hazards

The mains power supply should be made to the isolation switch on the outside of the S300 cabinet, see sub-section 'Aquacell S300 Mains Isolation Box' drawing later in this section for further details

NOTE: S320H Samplers contain a refrigeration system and as such electrical protective devices should be suitably motor rated

1. Remove the Mains Supply Isolation Box cover on the side of the Sampler by removing the 2 fixing screws. NOTE: The switch must be in the 'OFF' position in order to allow for this. The Samplers electrical supply terminals are now exposed (see S300 Mains Isolation Box diagrams later in this section)
2. A suitable electrical supply should be provided for the Sampler (see 'Technical Specification' (Section 6)). Supply voltage must match that indicated on Rating Label on the side of the S300 cabinet
3. Connect the power supply as per the S300 Mains Isolation Box diagrams later in this section
   NOTE: Do not switch the power on at this time
4. Reposition the isolation box cover and secure with the fixing screws previously removed

NOTE: For S320H Samplers, allow to stand for at least 2 hours before first switching on, in order for the refrigerant to settle after installation

Aquacell S300 Mains Isolation Box

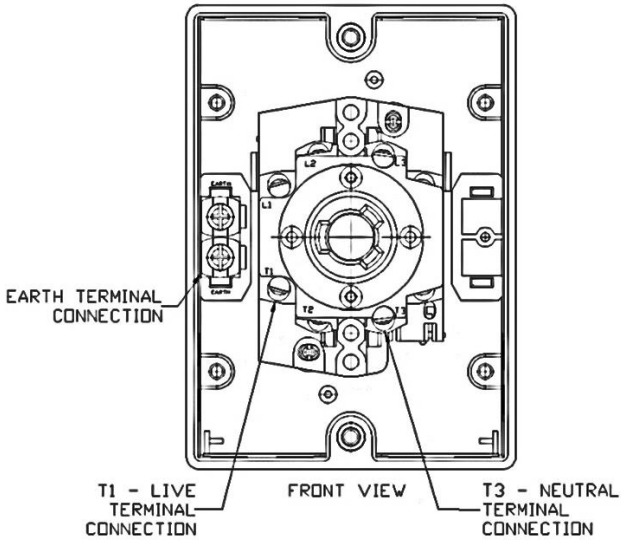

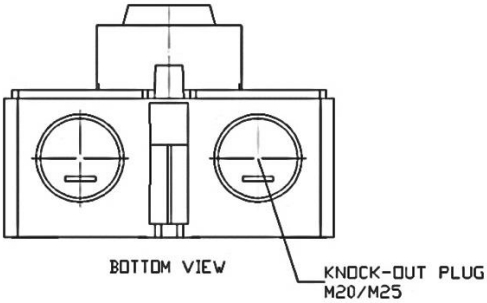

Installing the Intake Hose and Setting the Sample Shot Volume

Each model is supplied with a 10m Intake Hose. This should be installed as follows:

1. Provide a suitable support for the filter end of the Intake Hose such that it is optimally positioned in the wastewater source in order to extract a representative sample. The illustration below shows the optional Intake Hose Support Bracket Kit (CL-4010) being used for this purpose:

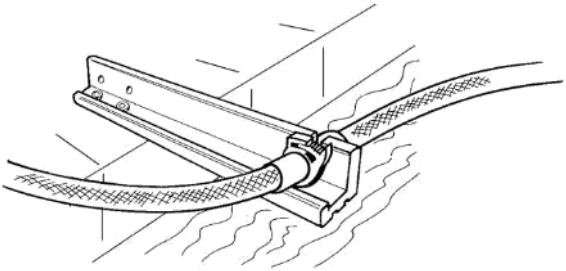

2. 2 x Intake Hose Anchors are provided with each Sampler. These comprise a short silicone rubber split tube which wraps around the Intake Hose and a plastic tube clip which is tightened around the silicone rubber, using pliers, as follows:

   Attach one of these to the Intake Hose at a point such that when it engages with the chosen support the stainless steel Intake Filter is suspended centrally in the body of wastewater from which samples are to be extracted
3. Suspend the Intake Filter in the flow by engaging the Intake Hose Anchor with the support
4. Now route the rest of the Intake Hose up to the Sampler Module. See the 'Intake Hose routing instruction' on the following page for details of this
5. Thread the upper end of the Intake Hose through the plastic gland in the right hand Side Panel of the Sampler Cabinet. An Intake Hose Anchor should be fitted at this point in order to provide suitable strain relief for the Intake Hose
6. Cut the Intake Hose to length so that it is able to engage with the Sample Chamber Intake Pipe on the Sampler Module
7. Thread the Intake Hose Clip over the loose end of the Intake Hose and soften the end of the Intake Hose by the application of heat

8. Push the softened end of the Intake Hose onto the Sample Chamber Intake Pipe so that approximately 20mm is engaged, as shown:

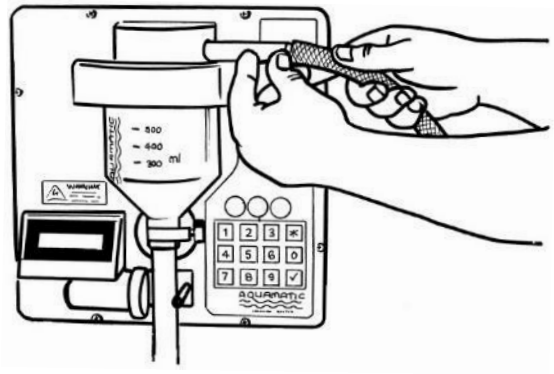

9. Secure in the Intake Hose onto the sampler by tightening the Intake Hose Clip

Good and bad examples of Intake Hose routing

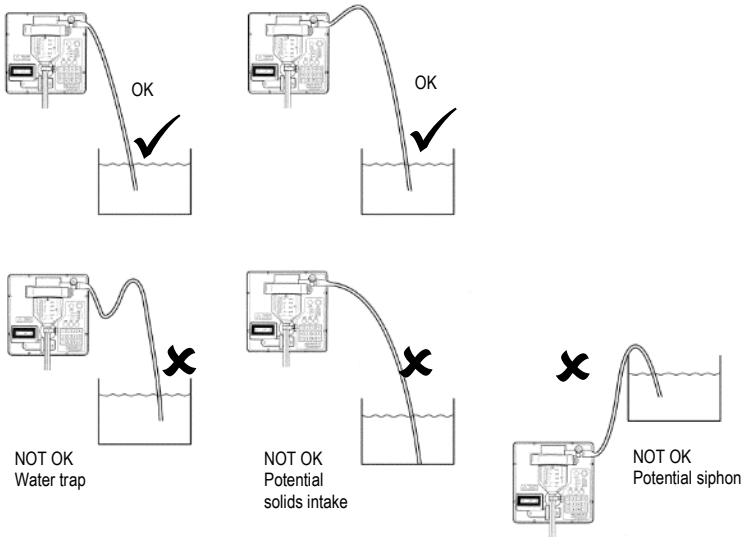

Additionally the following points should be considered when installing your Intake Hose:

- Ensure that there are no leaks in Intake Hose joints. Leaks will cause air bubbles in the water being drawn up the Intake Hose and, in turn, the Samplers lift velocity will be degraded

- Ensure the stainless steel Intake Filter is always fully immersed. A partially immersed Intake Filter will result in excessive splashing inside the Sample Chamber during the sample intake phase, this can in turn lead to warnings and possible damage to your Sampler
- Try to ensure that the Intake Hose run is sufficiently inclined to be self-draining, this will help to maximise the integrity of each collected sample
- Depending on the Intake Hose installation, residual liquid may remain in the Intake Hose between samples. As such, for applications where freezing ambient temperatures are likely to be encountered trace heating of this Hose may be necessary

Setting the Sample Shot Volume

The Sampler is supplied from the factory to extract a nominal 100ml Sample Shot volume and in many applications this is adequate. Certain applications may require an alternative sample shot volume; this is extremely simple to set up:

1. Remove the Sample Chamber/Top Assembly from the Sampler (as detailed in Section 5 'Maintenance' sub-section 'Cleaning') and separate the Sample Chamber from the Chamber Top
2. For Sample Shot volumes greater than 100ml simply cut the silicone rubber Volume Control tube to the required length (approximate shot volume lengths are shown on the side of the Sample Chamber)
3. For sample shot volumes less than 100ml remove the existing silicone rubber Volume Control Tube and replace it with the spare Volume Control Tube (as supplied with the Sampler). Cut the new tube to the required length (approximate sample shot volume lengths are shown on the side of the Sample Chamber)

Note: Where a more precise sample shot volume is required, volumes can be fine-tuned using alternative means e.g. measuring cylinder, weight. Sample shot volumes can be checked and the Volume Control tube length progressively adjusted between samples until the required sample shot volume is achieved

Sample Collection Vessels

Single Containers / Removable Bottlers

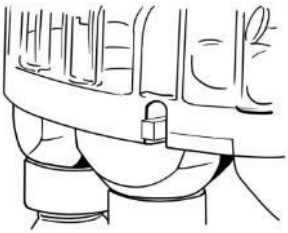

When locating the Distributor Unit on the Bottle Carrier ensure that the orientation slot in the Distributor Unit engages with the corresponding peg on the Bottle Carrier

1. Place the Sample Collection Vessel on the tray in the Lower Compartment beneath the sample outlet tube (Pinch Valve Tube)
2. Place the Pinch Valve Tube in the top opening of the Container or Bottler. The tube should engage into the Container or Bottler Distribution Pipe to a nominal depth of 60mm
3. If the SCV is a Bottler, connect its cable to the Bottler Connection (suspended from the rear left corner inside the Lower Compartment)

Integral Bottlers

Position Bottles / Bottle Carrier on the Lower Compartment Pull-Out Tray as determined by the plastic location pegs

Self-Emptying Bottlers

All Self-Emptying Bottlers (including Self-Cleaning) will require a suitable gravity drain; this can be setup as follows:

1. The S300 Sampler will be provided with a 'Self-Emptying Drain' and a 'Wastewater Drain' which connect together and then to a P-trap at the rear of the Cabinet, as shown on the next page
2. Construct the drain from 56mm O/D, 50mm I/D plastic pipe and connect to the P-trap at the rear of the Cabinet
3. The Self-Emptying Bottler will sit on a Pull-Out Tray inside the Container Zone. The Bottler has a Drain Spigot which connects to the expansion coupling with the chevron seal at the rear of the Container Zone, allowing the Bottler to be pulled out and pushed in for easy access to the bottles

NOTE:

- Where possible the 'P-Trap' section of a Wastewater Drain should be fitted in a temperature controlled area, this will avoid freezing of the 'trapped' effluent and possible damage to the Sampler. Where this is not possible additional trace heating maybe required to ensure continuous operation of the equipment

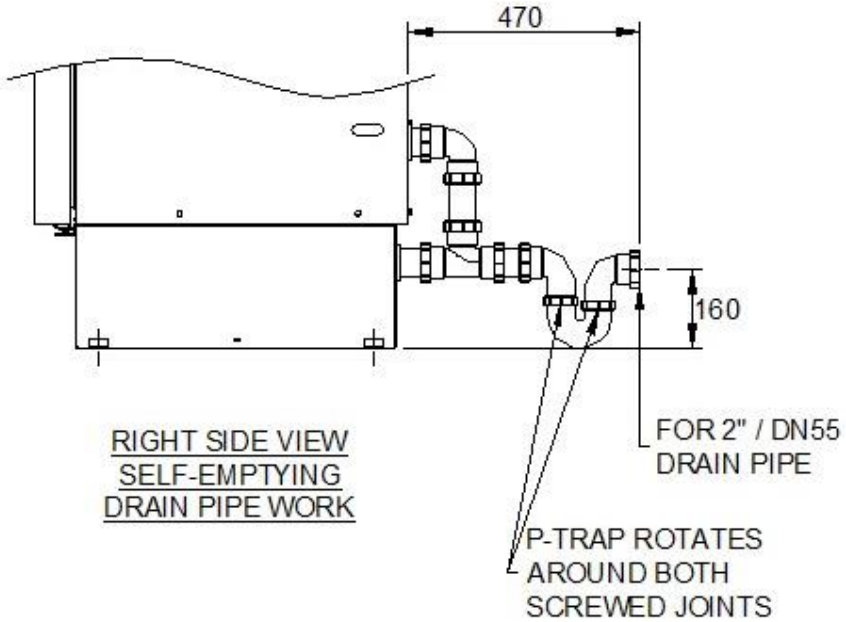

Self-Emptying Self-Cleaning Bottlers

In addition to a suitable gravity drain (see Self-Emptying Bottlers above); Self-Emptying Self-Cleaning Bottlers also require a pressurised wash-water supply situated close enough to the Sampler such that it can be connected to the rear of the S300 Cabinet via the supplied 2.5m wash-water hose. Connect one end of the hose to the site supply (¾" BSP female connector is provided) and the other end to the ¾" BSP male connector situated on the top right corner of the S300 Cabinet upper rear panel

NOTES:

- The wash-water supply pressure should not exceed 6 bar and should be within the temperature range of 1 - 60˚C
- In exposed locations, to avoid freezing, the wash-water hose may require thermal protection such as lagging or trace heating etc.
- There is no backflow protection incorporated within the Self-Cleaning wash system

Connecting Optional Equipment

Ancillary Signal Connection

Auxiliary equipment should, if possible, be positioned such that the cable connecting it to the Samplers Ancillary Signals Terminal Box does not exceed 1.5 metres*. Dependant on requirement, auxiliary equipment should be terminated as follows:

Flow Meter Input * – Option A
Integrated flow impulse signal – Normally open volt free contact

Cable Cores	*Term No.*	*Notes*
Black (common)	1	Inputs should be a 'Normally Open' volt free contacts Minimum contact closure period >30ms followed by minimum opening period of >20ms
Red	2	

Flow Meter Input * – Option B
Isolated 4-20mA flow analogue signal

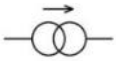

Cable Cores	*Term No.*	*Notes*
Red (- negative)	2	
Blue (+ positive)	5	

Remote Control Input (typically from pump controller or PLC etc.)

Cable Cores	*Term No.*	*Notes*
Black (common)	1	Inputs should be a 'Normally Open' volt free contacts Minimum contact closure period >50ms
Green	4	

Sample Acquired Output (typically connected to logging device)

Cable Cores	*Term No.*	*Notes*
Yellow	3	Outputs are 'Normally Open' volt free relay contacts rated at 50VDC 1A
Brown	7	

Sampler Warning Output (typically connected to alarm monitoring system)

Cable Cores	*Term No.*	*Notes*
White	6	Outputs are 'Normally Open' volt free relay contacts rated at 50VDC 1A NOTE: Contacts are CLOSED when system is healthy
Violet	8	

* Peripheral equipment should connect directly to the Sampler via a suitable 1.5 metre Ancillary Signal Cable. Where this is not possible, then appropriate isolators maybe sourced and fitted to the wires in order to protect from potentially damaging electrical transients resulting from long cable runs (subject to site conditions)

Ancillary Signal Connection Junction Box - Standard 8 Way

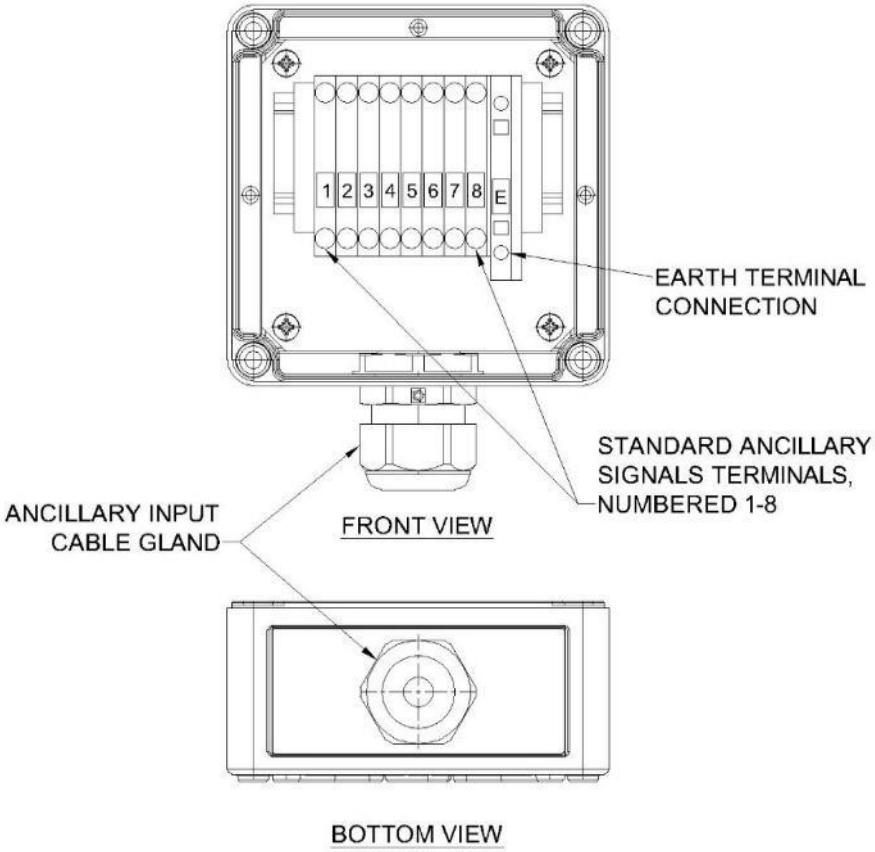

Ancillary Signal Connection Junction Box - Standard 8 Way + 4 AUX Terminals

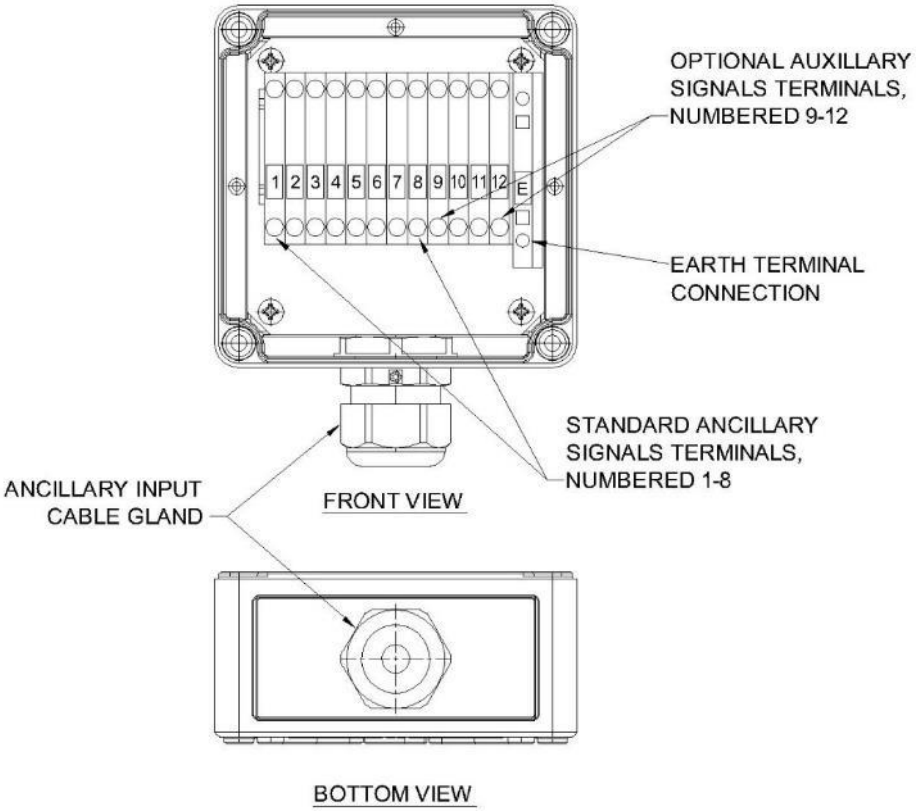

Ancillary Signal Wiring Schematic

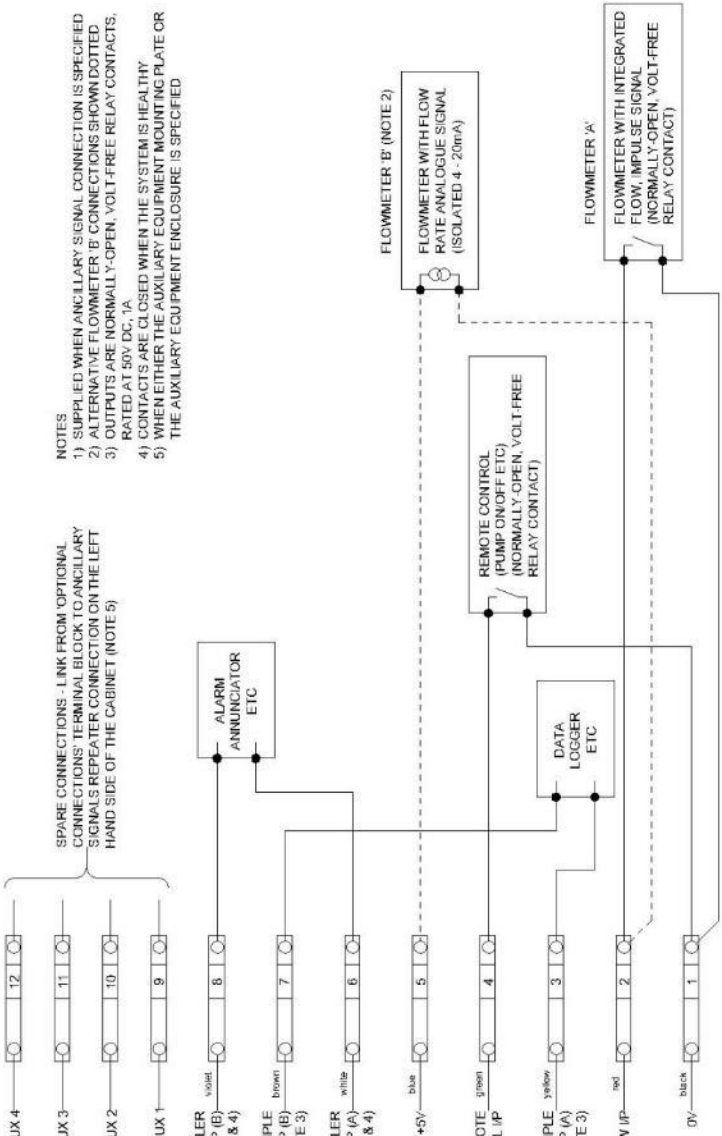

Auxiliary Equipment Enclosure

See Auxiliary Equipment Mounting Plate / Enclosure wiring diagram for details of connecting this item

1. Ensure that the Sampler is switched off and isolated from the power supply
2. In order to avoid damage during transit the Auxiliary Equipment Enclosure is supplied separate from the Sampler
3. Open the enclosure using the key provided and remove the mounting plate
4. Drill the mounting plate and attach the auxiliary equipment as required
5. Replace the mounting plate in the enclosure
6. Thread the mains cable out through the top cable gland on the left-hand side of the enclosure and terminate it in the Auxiliary Power Connector provided
7. Thread the auxiliary signals cable in through the bottom cable gland on the left-hand side of the enclosure and couple it to the auxiliary equipment as required
8. The Auxiliary Equipment Enclosure should have 2 strain relieved flying leads coming from it, cut to a suitable length to connect to the mating connectors on the left-hand side of the S300 Series Sampler
9. Attach the fully assembled / wired Equipment Enclosure to the 4 fixing points on the left-hand side of the Sampler using the fixing screws provided
10. Connect the Ancillary Signal Cable to the 12-pole connector on the side of the Sampler
11. Connect the Mains Supply Cable to the 3-pole connector on the side of the Sampler

Auxiliary Equipment Enclosure wiring diagram

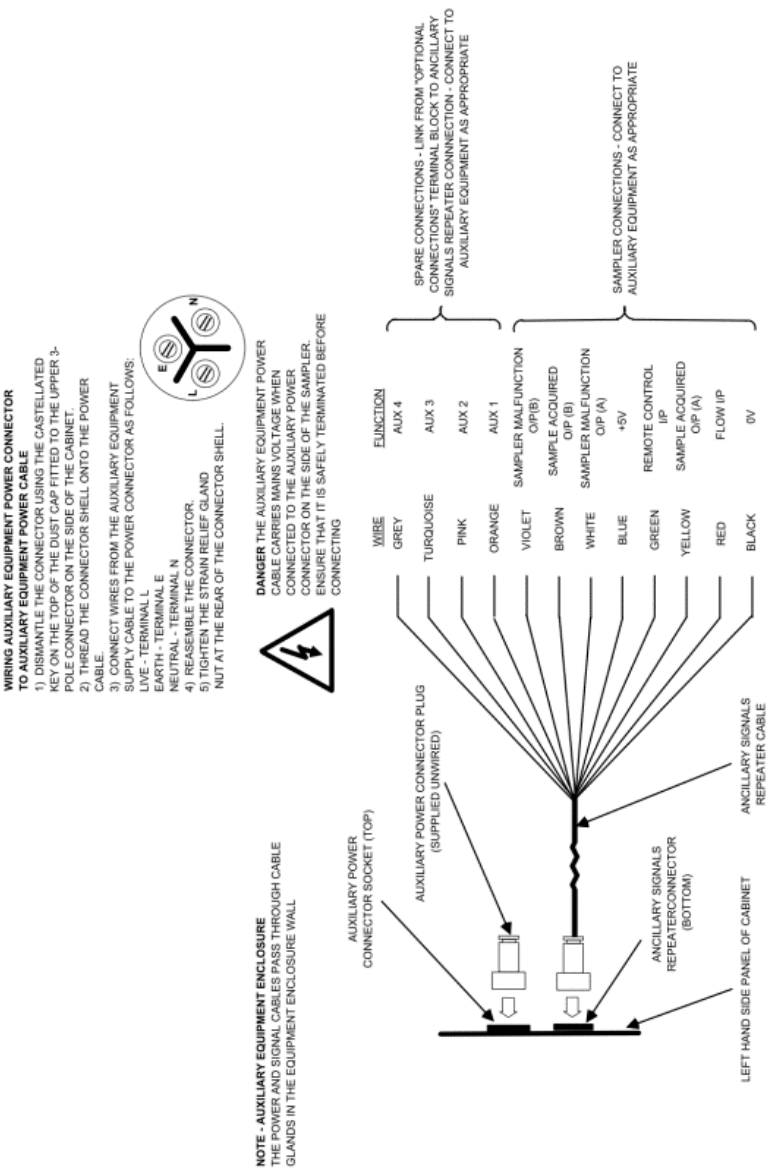

Beacon

For transportation purposes the rear mounted Beacon is supplied in 2 sections, the base is fixed to the Cabinet Lid whilst the top is loose and folded down. Prior to use the top section must be screwed onto its base, this can be done by hand as follows:

- Rotate the top section anti-clockwise half a turn in order to wind back the cable ready to screw clockwise onto the base
- Screw the top section clockwise onto the base
  NOTE: As the thread engages ensure the gasket that sits between both sections is central so as not to get pulled in by the thread

Once fitted correctly the Beacon is suitable for indoor and outdoor use

The indication system used by the Beacon is as follows:

Green indicator static	Power on. No program running
Green indicator flashing	Program running
Red indicator flashing	Warning(s) have occurred Note: Warnings occurring during a running program can be cancelled by pressing 'VIEW' button on the sampler module keypad

Mains with Back-Up Battery incorporating Float Charger *

All S300 Series Samplers are supplied with an AC mains power connection. In addition to this there is an optional Back-up Battery available for the Sampler Module

This option is intended as a short term back-up power supply for the Sampler Module only (not the refrigeration / heating systems) in the event of a power outage. During periods of use there will be no sample temperature control in the lower compartment and the rear plant zone. As such there may be noticeable temperature variations in the normally temperature controlled zones of the S300 Series. These variations will be corrected when mains power is restored

The Back-Up Battery is pre-installed in S300 Series Samplers and has a rocker switch mounted on the Sampler Panel, this is used to connect and disconnect the Battery as required. This switch should be set to the 'Disconnected' position whilst the Sampler is not in use

IMPORTANT: The Back-Up Battery is intended as a short term temporary back up in the event of a power outage. As such it should be left in the 'Disconnected' position for extended periods (more than 24hrs) of power outage. Failure to do this may cause the Battery to over discharge which can result in damage to it and / or the Sampler Module

* The Sampler Battery supplied by Aquamatic is a valve regulated lead acid type (VRLA). These batteries are very recyclable. Please ensure that spent batteries are safely returned to Aquamatic Ltd, your Distributor, or an approved waste handling / disposal organisation. For neutralized spills, place residue in acid-resistant containers with sorbent material, sand or earth and dispose of in accordance with local regulations

Pressurised Pipeline Interface

The optional Pressurised Pipeline Interface should setup and connected as detailed in the separate User Guide Supplement titled 'Pressurised Pipeline Interface'

Wastewater Drain

Samplers specified with a Self-Emptying Integral Bottler are supplied with a Wastewater Drain. The Self-Emptying Bottler drain outlet and the Wastewater Drain outlet are connected to a P-Trap using the compression fittings supplied as follows:

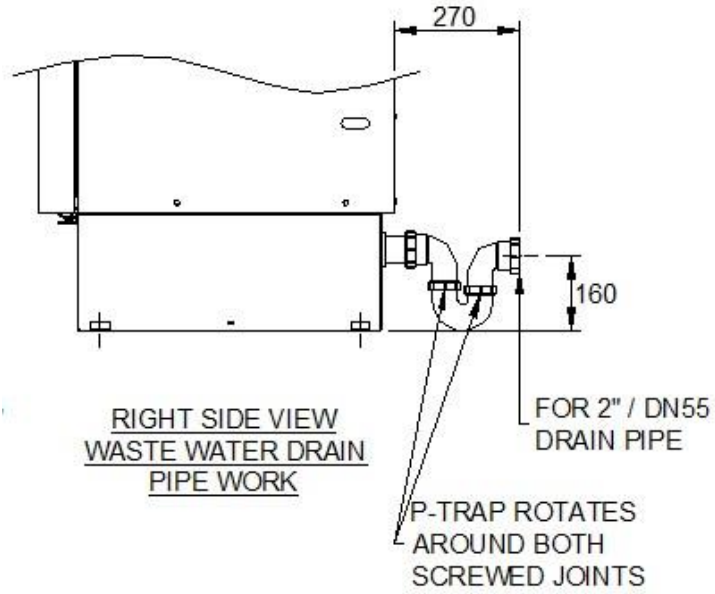

4 OPERATION

Definitions.....4.3

Basic Operation.....4.3

Controlling the Sampler

Taking a Spot Sample

Programming.....4.5

System Settings

Program Settings

Special Option Settings

Using INFORMATION i button

The Event Log

Running the Program

Data Connection

Definitions

SAMPLE SHOT	A single aliquot of liquid extracted from a specific sampling point
SAMPLE	One or more SAMPLE SHOT's taken in immediate succession
SPOT SAMPLE	A manual SAMPLE initiated by pressing the 'SPOT SAMPLE' button
PROGRAM	The user defined sampling instructions which are entered into the Sampler
SYSTEM SETTINGS	Core Sampler settings e.g. Time, language, configuration, operating mode etc.
PROGRAM SETTINGS	Start and stop times, sampling frequency, time / number of samples per bottle (multiple bottle formats) etc.
SAMPLE ROUTINE	A sequence of SAMPLE's taken in line with the PROGRAM

Basic Operation

Controlling the Sampler

The Sampler is controlled and programmed using the panel mounted keypad in conjunction with LCD screen

Front Panel of Sampler Module

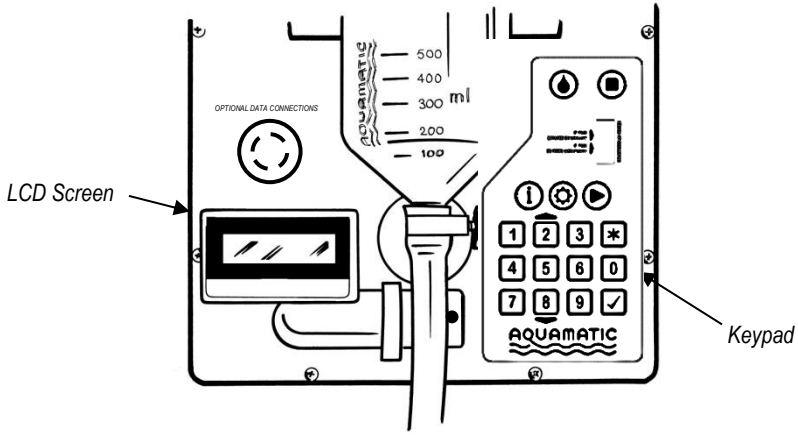

The keypad is divided into circular operating buttons and square programming buttons:

Operating Buttons

SYMB	DEFINITION	DESCRIPTION
●	SPOT SAMPLE	Manually initiates a single sample (available either in standby or during a running program)
■	STOP	Aborts a running program or Sample Shot
i	INFORMATION	Gives access to various Sampler information
☼	SET PROGRAM	Allow user to setup specific sampling program parameters
▶	RUN PROGRAM	Initiates users sampling program

Programming Buttons

SYMB	DEFINITION	DESCRIPTION
*	TOGGLE	Step through available options or return to the start of a date / time entry
O - 9	NUMBER ENTRY	Numerical selections
✓	ACCEPT	Enter / move to next selection
▲(key 2)	SCROLL UP	Steps up Event and Warning logs in information menus
▼(key 8)	SCROLL DOWN	Steps down Event and Warning logs in information menus

Taking a Spot Sample

SPOT SAMPLE ● is an Operating button on the Keypad. This button can be pressed both in Standby mode and during a running program and will activate a single sample. Each sample will be collected as follows:

IDENT	DISPLAY	ACTION / COMMENTS
SPOTSAM1	==SAMPLING NOW== CLOSE VALVE	Pinch Valve closes on the Pinch Valve Tube connected to the outlet of the Sample Chamber ➔ See SPOTSAM2
SPOTSAM2	==SAMPLING NOW== PRE PURGE	Air is blown into the Sample Chamber and down the Intake Hose. This will purge any standing effluent from the Intake Hose ➔ See SPOTSAM3
SPOTSAM3	==SAMPLING NOW== INTAKE	Effluent is drawn up Intake Hose and into the Sample Chamber at a nominal 0.5 metres / second. Effluent fills the Sample Chamber up to the 2 long electrodes protruding down from the Sample Chamber Top ➔ See SPOTSAM4

SPOTSAM4	==SAMPLING NOW== POST PURGE	Excess effluent is purged from Sample Chamber back up the Volume Control Tube and down the Intake Hose until the level reaches the bottom of the Volume Control Tube. This leaves a measured volume in the Sample Chamber, this is the Sample Shot ➔ See SPOTSAM5
SPOTSAM5	==SAMPLING NOW== SAMPLE RELEASE	Pinch Valve opens and the collected Sample Shot is released into the specified Sample Collection Vessel ➔ See DEFAULT

Programming

Once your Aquacell Sampler has been installed, connected to any optional equipment, switched on, and you have become familiar with the basic operations, it is then necessary to input your specific sampling program requirements.

The tables below show the various screens used to program your Sampler. The 'DISPLAY' column shows the default option on the second line and alternative options below in square brackets [ ]

IDENT	DISPLAY	ACTION / COMMENTS
DEFAULT	AQUACELL READY	Press SET PROGRAM button to program the Sampler ➔ See SETPROG
SETPROG	SELECT MODE ∗ PROGRAM SETTINGS [SYSTEM SETTINGS] [SPECIAL OPTIONS]	Select SYSTEM SETTINGS to set up the basic system information. Select PROGRAM SETTINGS to setup specific sampling routine information ➔ See SYSSET1 if SYSTEM SETTINGS ➔ See PROGSAM1 if PROGRAM SETTINGS ➔ See SPECOP 1 if SPECIAL OPTIONS

System Settings

IDENT	DISPLAY	ACTION / COMMENTS
SYSSET1	SELECT LANGUAGE ∗ ENGLISH [OTHER LANGUAGES]	Select the language of your choice ➔ See SYSSET2
SYSSET2	DATE/TIME 21-05-00 15:30	Set current time & date ➔ See SYSSET3
SYSSET3	DAYLIGHT SAVING ∗ NO [EUROPE]	Select the clock time mode for the Sampler: • NO – Clock time remains consistent through the year • EUROPE – Clock time changes to European Summer Time (forward 1hr at 01:00 last Sunday in March, back 1hr at 02:00 last Sunday in October) ➔ See SYSSET4

SYSSET4	SAMPLE TEMP LOG ∗ NO [STOP WHEN FULL] [ROLLING]	The Sampler is capable of logging sample temperatures when specified with Sample Temperature Monitoring (see MAINTENANCE for details of fault registration). There are 2 ways in which the Sample temperature data can be stored: • ROLLING – Where data will over write when the log is full, giving approximately the last 41 days of data for up to 70 days from running the program • STOP WHEN FULL – Where data will stop being stored when the log is full, giving the first 41 days of data only ➔ See SYSSET5
SYSSET5	LOW POWER MODE ∗ NO [YES]	When selected, in the absence of a button press (for approx. 70 seconds), the Sampler will enter a low power consumption mode. During this phase the LCD will switch off. Pushing any button will restore the LCD display. Notes: • LOW POWER MODE cannot be used when SAMPLING MODE is set to FLOW • LOW POWER MODE will disable the Sampler Warning Output ➔ See SYSSET6
SYSSET6	PPI MODE ∗ NO [YES]	The Sampler is capable of sampling from a pressurised effluent source when specified with the appropriate Pressurised Pipeline Interface / Connection ➔ See SYSSAM1
SYSSAM1	SAMPLER SETTINGS > > > > > > >	Information screen only ➔ See SYSSAM2
SYSSAM2	BOTTLER FITTED ∗ NO [YES]	The Sampler is capable of distributing samples into multiple bottles when specified with a Bottler ➔ See SYSSAM3
SYSSAM3	SHOTS/SAMPLE 01	The Sampler is capable of extracting larger volumes of wastewater by taking multiple consecutive 'Sample Shots' each time a 'Sample' is due ➔ See SYSSAM4
SYSSAM4	INITIAL SAMPLE ∗ YES [NO]	On 'Running' a program the first sample can be taken either immediately following the programmed 'START TIME' or be governed by the programmed 'TIME' or 'FLOW' interval NOTE: With a flow proportional sampling application 'INITIAL SAMPLE' would not normally be selected ➔ See SYSSAM5
SYSSAM5	SAMPLING MODE ∗ TIME [FLOW]	Samples can either be taken at fixed time intervals or, when coupled to a suitable flowmeter, in relation to flow ➔ See SYSSAM8 if TIME ➔ See SYSSAM6 if FLOW

SYSSAM6	FLOW ORIDE TIME ∗ DISABLED [ENABLED]	When working with a FLOW signal, a forced timed sample can be scheduled when insufficient effluent has passed to activate a sample on flow basis alone ➔ See SYSSAM7
SYSSAM7	FLOW SIGNAL ∗ 4/20mA [IMPULSE]	Sampler can accept either an impulse signal repeating at equal flow increments or an analogue 4/20mA signal corresponding to flow rate ➔ See SYSSAM8
SYSSAM8	REMOTE CONTROL ∗ NO [YES]	The sampling routine can be inhibited / enabled by an external signal. Each time a new REMOTE CONTROL signal is ON the sample routine will start, each time REMOTE CONTROL is OFF the sample routine will stop ➔ See SYSSAM9 if YES and sampling by TIME ➔ See SYSSAM10 if YES and sampling by FLOW ➔ See SYSSAM11 if NO
SYSSAM9	CONTROL MODE ∗ SAMPLER ENABLE [PUMP/TIME TRIG]	With SAMPLER ENABLE selected, the start time for timed samples will begin from zero each time REMOTE CONTROL signal is switched to ON. ➔ See SYSSAM10 With PUMP/TIME TRIG selected, the start time for timed samples begins when RUN PROGRAM is pressed and sample timing continually counts from this point irrespective of whether REMOTE CONTROL is ON or OFF ➔ See SYSSAM10
SYSSAM10	INITIAL DELAY 00HR 02MIN	A delay can be programmed in the Samplers recognition of the external signal. This delay is typically used when a pump is providing the control signal to allow the pump to establish a representative flow ➔ See SYSSAM11 if Bottler is not fitted ➔ See SYSSAM13 if Bottler is fitted
SYSSAM11	OVERFILL PROT ∗ NO [YES]	The number of sample shots can be limited, when using a single composite sample container to avoid overfilling ➔ See SYSSAM12 if YES ➔ See SYSSAM13 if NO
SYSSAM12	MAXIMUM SAMPLES 0100	Set maximum allowable number of samples ➔ See SYSSAM13
SYSSAM13	PRE PURGE 03 SEC	The time required, to expel the standing column of water in the submerged sample Intake Hose prior to the sample shot being collected The PRE PURGE time should be long enough to ensure that water is expelled from the Intake Hose followed by bubbles emitted from the end of the Intake Hose for approximately 2 seconds ➔ See SYSSAM14

SYSSAM14	POST PURGE 06 SEC	The time required, to expel the risen column of water from the submerged sample Intake Hose. The POST PURGE time should be long enough to ensure that water is expelled from the Intake Hose followed by bubbles emitted from the end of the Intake Hose for approximately 2 seconds ➔ See SYSSAM15
SYSSAM15	TIME OUT LIMIT 060 SEC	The period for which the Sampler will attempt to draw the effluent up the Intake Hose can be varied to suit the application. Maximum 199 seconds ➔ See SYSSAM16
SYSSAM16	SYSTEM SETTINGS INSTALLED	Information screen only ➔ See SETPROG if Bottler not fitted ➔ See SYSBOT1 if Bottler is fitted
SYSBOT1	BOTTLER SETTINGS > > > > > > >	Information screen only ➔ See SYSBOT2
SYSBOT2	BOTT LOCATIONS ∗ 24 [etc]	Set according to bottler format ➔ See SYSBOT3
SYSBOT3	RE-CYCLE ∗ NO [YES]	Bottler can either stop on last bottle or continue on to Bottle 1 and repeat its cycle continuously ➔ See SYSBOT4
SYSBOT4	BOTTLER MODE ∗ SINGLE [GROUP]	In SINGLE mode each bottle is addressed individually according to the program selected. In GROUP mode a nominally identical sample is deposited into each bottle of a group simultaneously* - Perhaps a bottle for each interested party, or possibly a separate bottle for each determinant (necessary where preservative dosing of the sample is required for example) ➔ See SYSBOT7 if SINGLE ➔ See SYSBOT5 if GROUP
SYSBOT5	BOTTLES/GROUP ∗ 2 [*other group sizes*]	Select number of bottles to be addressed simultaneously* (2, 3, 4, 6, 8, 12 or 24). This number must be a factor or equal to the number of specified bottle locations ➔ See SYSBOT6
SYSBOT6	BOT 15 SEC PAUS ∗ NO [YES]	To avoid residual effluent drops falling into a subsequent Bottle the Sampler can be programmed to hold the Distributor Pipe over each Bottle for 15 seconds following Sample Release ➔ See SYSBOT7
SYSBOT7	INCREMENT BY ∗ TIME [SAMPLES]	The Bottler can be programmed to advance bottles (or groups) either at regular time intervals or after a fixed number of samples ➔ See SYSBOT8 if TIME and SAMPLING MODE is FLOW Otherwise: ➔ See SYSBOT9

SYSBOT8	MAX SAMPS/BOTTLE 0005	Set maximum number of allowable samples per Bottle ➔ See SYSBOT9
SYSBOT9	BOTTLE CLEANING NO [YES]	Select this where a 2 x 4.5 litre Self-Emptying Self-Cleaning Bottler has been supplied with your S300 Sampler ➔ See SETPROG

Program Settings

IDENT	DISPLAY	ACTION / COMMENTS
PROGSAM1	SAMPLER SETTINGS > > > > > > >	Information screen only ➔ See PROGSAM2
PROGSAM2	START ROUTINE ∗ IMMEDIATELY [21-05-12 15:30]	Set a date / time for the sample routine to commence, or select IMMEDIATELY. If IMMEDIATELY is selected the sample routine will start at the time the RUN PROGRAM ► button is pressed ➔ See PROGSAM3
PROGSAM3	STOP ROUTINE ∗ NON STOP [22-05-00 15:30]	Set a date / time for the sample routine to stop, or select NON STOP ➔ See PROGSAM4 if time between START ROUTINE and STOP ROUTINE is less than 24 hours and both are within the same day ➔ See PROGSAM5 if SAMPLING MODE is TIME ➔ See PROGSAM6 if SAMPLING MODE is FLOW & IMPULSE ➔ See PROGSAM7 if SAMPLING MODE is FLOW & 4/20MA
PROGSAM4	REPEAT DAILY ∗ NO [YES]	If the duration of the sampling routine is less than 24 hours it can be repeated daily if required ➔ See PROGSAM5 if SAMPLING MODE is TIME ➔ See PROGSAM6 if SAMPLING MODE is FLOW & IMPULSE ➔ See PROGSAM7 if SAMPLING MODE is FLOW & 4/20MA
PROGSAM5	SAMPLE INTERVAL 00HR 01MIN	Set time between samples ➔ See PROGSAM9 if Bottler not fitted ➔ See PROGBOT1 if Bottler is fitted
PROGSAM6	IMPULSES/SAMPLE 0005	Set flow impulses between samples ➔ See PROGSAM9 if Bottler not fitted ➔ See PROGBOT1 if Bottler is fitted
PROGSAM7	INT AT FULLSCALE 001 MIN	Set required sample interval time when flow is at Full Scale i.e. 20mA ➔ See PROGSAM8 if FLOW OVERRIDE is ENABLED ➔ See PROGSAM9 if FLOW OVERRIDE is DISABLED

PROGSAM8	FLOW O/RIDE TIME 00HR 10MIN	Set the time after which a sample will be taken in a situation where the flow during that period has been insufficient to trigger one ➔ See PROGSAM8 if Bottler not fitted ➔ See PROGBOT1 if Bottler is fitted
PROGSAM9	PROGRAM SETTINGS INSTALLED	Information screen only ➔ See DEFAULT
PROGBOT1	BOTTLER SETTINGS > > > > > > >	Information screen only ➔ See PROGBOT2 if INCREMENT BY SAMPLES ➔ See PROGBOT3 if INCREMENT BY TIME
PROGBOT2	SAMPLES/BOTTLE 001	Set the number of samples to be deposited into each Bottle ➔ See PROGBOT4
PROGBOT3	TIME PER BOTTLE 00 HOURS 30 MINS	Set the time duration for which samples are to be deposited into each Bottle ➔ See PROGBOT4
PROGBOT4	PROGRAM SETTINGS INSTALLED	Information screen only ➔ See DEFAULT

Special Options Settings

Special Options is available for functions which are only required for specialised applications

IDENT	DISPLAY	ACTION / COMMENTS
SPECOP1	AUTO RESTART ∗ NO [YES]	The Sampler can be made to automatically restart its program after a power interruption (this option is not available when a Bottler is connected) ➔ See SPECOP2
*SPECOP2 **	SHOTS/BOTTLE(G) ∗ NO [YES]	The Sampler can be made to deposit individually designated numbers of sample shots into each bottle of a bottle array when in GROUP mode ➔ See SPECOP3
SPECOP3	SAMP ACQUIRED OP ∗ ON COMPLETION [DURING ATTEMPT]	'Sample Acquired' relay output can be programmed to operate in 2 ways: • ON COMPLETION – Closes on acquisition of a successful sample shot, at the end of the INTAKE phase *(SPOTSAM3)* • DURING ATTEMPT – Closes for the full duration of the sample shot attempt (whether successful or not), opening at the end of the POST PURGE phase (*SPOTSAM4)* ➔ See SPECOP4

SPECOP4	SAMP ACQUIRED OP ∗ DEFAULT LATCH [AUTO LATCH]	'Sampler Warning' relay output can be programmed to operate in 2 ways: • DEFAULT LATCH - The output will hold for 10 seconds only • AUTO LATCH – The output will hold for a preset time, or when ℹ INFORMATION button is pressed ➔ See SPECOP5 if AUTO LATCH Otherwise: ➔ See SPECOP06
SPECOP5	AUTO LATCH TIME ∗ 00HR 00MIN 10SEC	Set the 'Sample Acquired' relay output latch time ➔ See SPECOP6
SPECOP6	SAMP WARNING OP ∗ DEFAULT LATCH [AUTO LATCH] [MANUAL LATCH]	'Sampler Warning' relay output can be programmed to operate in 3 ways: • DEFAULT LATCH - The output will hold for 10 seconds only • AUTO LATCH – The output will hold for a preset time, or when ℹ INFORMATION button is pressed • MANUAL LATCH – The output will hold indefinitely until the ℹ INFORMATION button is pressed ➔ See SPECOP7 if AUTO OFF Otherwise: ➔ See SPECOP08
SPECOP7	AUTO LATCH TIME 00HR 00MIN 10SEC	Set the 'Sample Warning' relay output latch time ➔ See SPECOP8
*SPECOP8 ** *	SELECT ZONES ∗ SINGLE ZONE [MULTI-ZONE]	Set the number of sampling time zones: • SINGLE ZONE – Normal program settings (i.e. START on TIME/IMMEDIATELY and STOP on TIME/NON-STOP) • MULTI-ZONE – Program settings will request a start date/time and a stop date/time for each of the number of zones selected in SPECOP7 ➔ See SPECOP10 if SINGLE ZONE ➔ See SPECOP9 if MULTI-ZONE
SPECOP9	MULTI-ZONE #02 ZONES	Set the number of desired sampling zones (maximum 24) ➔ See SPECOP10
SPECOP10	WHEN BTL FULL ∗ WAIT FOR INTERVL [ADV TO NEXT BTL]	With a Bottler fitted, sampling by FLOW and advancing the Bottler by TIME, if high flowrate demands more samples than 'MAX SAMPLES PER BOTTLE' this option advances the Bottler to continue taking Samples within the 'TIME PER BOTTLE' period • WAIT FOR INTERVAL – Only one Bottle per 'TIME PER BOTTLE' period will be used • ADV TO NEXT BTL – Multiple Bottles per 'TIME PER BOTTLE' period will be used as Flow demands ➔ See SPECOP11

SPECOP11	SPECIAL OPTIONS INSTALLED	Information screen only ➔ See DEFAULT

* When SPECOP2 'SHOTS / BOTTLE' is selected 2 new screens will appear in the 'System Settings' > 'Bottler' menus, these are shown as follows:

IDENT	DISPLAY	ACTION / COMMENTS
SYSBOT4A	BOTTLES / GROUP ∗ 2 [other group sizes]	Select number of bottles to be addressed sequentially during each sample. This value must be a factor of the number of bottles locations ➔ See SYSBOT5A
SYSBOT5A	BOTTLE = 01 ∗ SHOTS = 02	Use ∗ to select the bottle number and input SHOTS = 02 a 2 digit number using the number keys to select the number of shots required to be deposited into each bottle of the bottle array ➔ See SETPROG

** When SPECOP8 'SELECT ZONES' is selected as 'MULTI-ZONE' the 'Program Settings' screen will change as follows as follows:

IDENT	DISPLAY	ACTION / COMMENTS
PROGSAM2X	START ZONE 01 [21-05-12 15:30]	Set a date / time for each of the sampling zones to start ➔ See PROGSAM3X
PROGSAM3X	STOP ZONE 01 [22-05-00 16:30]	Set a date / time for each of the sampling zones to stop ➔ See PROGSAM4 if total time between START zone 01 and STOP zone 24 (or last zone) is less than 24 hours and both are within the same day

Having selected one or more of the 'SPECIAL OPTIONS' the 'DEFAULT' screen will show a '+' positioned at the bottom left of the display.

Using INFORMATION i button

To assess the Program you have entered, or its progress, press the INFORMATION i button. The display will show as follows:

IDENT	DISPLAY	ACTION / COMMENTS
INFODEF	VIEW ∗ PROG SETTINGS [SHOT PROGRESS] [SAMPLE TEMP] [WARNING LOG] [SAMP/WARNING LOG] [EXIT]	Select YES to see options available or EXIT to return to default display. ➔ See INFO1 if PROG SETTINGS ➔ See INFO2 if SHOT PROGRESS ➔ See INFO3 if SAMPLE TEMP ➔ See INFO4 if WARNING LOG ➔ See INFO5 if SAMP/WARNING LOG ➔ See DEFAULT if EXIT

INFO1	START SAMPLING IMMEDIATE ↓ STOP SAMPLING NON-STOP ↓ SAMPLE INTERVAL OOHOURS 30MINS ↓ SAMPS/BOTTLE 001	Auto-scrolls though key Sampling Program settings ➔ See DEFAULT
INFO2	SHOTS ATTEMPTED 0048 ↓ SHOTS COMPLETED 0048	Auto-scrolls though key shot progress information ➔ See DEFAULT
INFO3	MAX SAMPLE TEMP = 4.0°C ↓ MIN SAMPLE TEMP = 1.0°C ↓ MEAN SAMPLE TEMP = 2.5°C ↓ PRESENT SAMPLE TEMP = 2.0°C	Auto-scrolls though key sample temperature data. This menu choice is only available if the Sampler is fitted with the Sample Temperature Monitoring Facility ➔ See DEFAULT
INFO4	0181 GUARD HIT 19:45 21-05-11 ⇕ ↓ 0295 TIME OUT 15:00 22-05-11 ⇕ ↓ etc.	Allows manual scrolling though all logged Warning Events. Each event has a unique 4 digit reference number, a short form description and a time and date of occurrence ➔ See DEFAULT
INFO5	0179 SAMPLE OK 19:15 21-05-11 ⇕ 0180 SAMPLE OK 19:30 21-05-11 ⇕ 0181 GUARD HIT 19:45 21-05-11 ⇕ ↓ 0182 SAMPLE OK 20:00 21-05-11 ⇕ ↓ etc.	Allows manual scrolling though all logged Sampling and Warning Events. Each event has a unique 4 digit reference number, a short form description and a time and date of occurrence ➔ See DEFAULT

The Event Log

The Samplers Event Log can contain up to approximately 1350 events. When these initially occur they will be momentarily displayed on the Samplers screen in the 'Full Form' format, but when being reviewed in the Event Log they will display in the 'Event Log Form' as shown in the table below.

The following table is a list of normal operational events which may appear in the Event Log, for all full set of Warnings event please see the Maintenance Section later in this User Guide.

FULL FORM MESSAGE	EVENT LOG FORM MESSAGE	ACTION / COMMENTS
INITIALISING	PRG START	Program has been initiated by pressing the ► RUN PROGRAM button
None	SAMPLE OK	Sample has been successfully acquired
None	ZONE STA 01	Start of zone
None	ZONE END 01	End of zone
INCREMENTING BOTTLER	INC BOTTLER	Bottler has moved to its next location after programmed time / number of samples
None	REM I/P ON	The external Remote Control input has closed
None	REM I/P OFF	The external Remote Control input has opened
PROGRAM COMPLETE	PRG COMPLET	Program has completed
STOP BUTTON PRESSED	STOPPED	Program has been stopped by pressing the ■ STOP button

Running a Program

To run your program, press the RUN PROGRAM ▶ button. On doing this the following screens will appear:

IDENT	DISPLAY	ACTION / COMMENTS
RUNPROG1	TESTING BOTTLER PLEASE WAIT	Only appears where Bottler is specified in SYSTEM SETTINGS
RUNPROG1	PROGRAM RUNNING 19-02-11 10:35	Shows current status and date / time
RUNPROG3	NEXT SAMPLE DUE 00HR 09MIN 34SEC	Indicates when next sample is due
RUNPROG4	BOTTLE INC. IN 00HR 19MIN 34SEC	Only appears where Bottler has been successfully detected in RUNPROG1 Indicates when next Bottler increment is due

In addition to the above status displays the Sampler will also display warning messages relating to any events which may have occurred during the program. Warning messages are displayed every few seconds and are accompanied by a bleep sound. When the program has completed the display will show:

PROGRAM COMPLETE	or	MAXIMUM SAMPLES REACHED

Data Connection

The Sampler's event log and optional temperature log can be downloaded via the optional Data Connection to a suitable computer / handheld communication device

The event log can store up to approx. 1350 events, including Sample Shots, Bottler increment events, external signal events etc. and approx. 12,000 Sample Temperature records. Samplers with the Data Connection fitted can be allocated a user defined tag / name

Communicating via the Data Connection

The following assumes that the computer has a suitable serial port communication program installed (such as HyperTerminal). Proceed as follows:

1. Connect the USB cable to the Sampler on the front panel
2. Connect other end of the USB cable to communications port (COMX) on computer
3. Power up computer and Sampler
4. Open a suitable serial port communication program (such as HyperTerminal) on the Computer
5. Set the Computer port properties as follows (settings may vary dependant on communications program):

Bits per second	19,200
Data bits	8
Parity	None

Stop bits 1
Flow control None

6. Set the Computer ASCII Setup as follows:
   Append line feeds to incoming line ends
   Wrap lines that exceed terminal width
   Emulation set to 'Auto detect'
7. Communication with the Sampler should now be possible

The Sampler can receive 7 control codes from the Computer, these are:

CODE	COMMENTS
∗s*[tagname]*	Where [*tagname*] is a user definable tag / ID (up to twenty ASCII characters long) Example: ∗sSAMPLER_123 then carriage return gives the Sampler the name SAMPLER_123
∗i	Shows basic Sampler information plus the full list of control codes: ∗i Unit = SAMPLER_123 Date: 21-05-19 Time 15:30 Sampler firmware: SXX.XX.XX.XX Temperature Correction = 0.0 C Command list: *i – Download Information *e – Download Event Log *w – Download Warning Log *t1 – Download Temperature Log in Spread Sheet Format *t2 – Download Temperature Log in Visual Appraisal Format *s – Change unit name *c – Cancel download
∗e	Calls the full Event Log from the Sampler If the logger contains 150 or more events, the computer will show:

```
*e
Unit = SAMPLER_123
Date: 21-05-19 Time 15:30
Sampler firmware: SXX.XX.XX.XX
EVENT LOG
Record Count = XXXXX
Approximate download time = XXX to XXX sec
Press the '1' button on the Sampler to continue with the download
Press the '2' button on the Sampler to abandon the download
The Sampler is waiting for response...
```

and the Sampler LCD will show:

```
[1] TO DOWNLOAD
[2] TO ABANDON
```

Press the 1 button on the Sampler to continue with the download

The Sampler LCD will show:

```
DOWNLOADING
```

When the download is complete, the screen returns to the DEFAULT

Note: If the logger contains less than 150 events the above choice will not be given and the download will automatically continue

---

*w

Calls the Warning Log from the Sampler

The computer will show:

```
*w
WARNING LOG
Record Count = 00001
21-05-19 15:35, 0003 SHOT T/OUT, (for example)
Download Complete
```

---

*t1

Calls the Temperature Log from the Sampler in spread sheet format suitable for transferring into a Spreadsheet on a Computer

The computer will show:

	∗t1 NOTE: Temperatures are logged at 5 minute intervals Enter ∗c to cancel the Download Approximate download time = 001 to 002sec SAMPLE TEMPERATURE LOG Spread Sheet format selected… Temperature Correction = 0.0 C Record Count = XXXXX DOWNLOADING Start Date: 21-05-19 Time 15:30 Maximum Sample Temp = 3.0 C Minimum Sample Temp = 3.0 C Mean Sample Temp = 3.0 C 00001, 21-05-19 15:35, 3.0 00001, 21-05-19 15:40, 3.0 *[more temperatures etc.]* Download Complete
∗t	Calls the Temperature Log from the Sampler in visual appraisal format suitable for viewing directly in the download The computer will show:
	∗t2 NOTE: Temperatures are logged at 5 minute intervals Enter ∗c to cancel the Download Approximate download time = 001 to 002sec SAMPLE TEMPERATURE LOG Spread Sheet format selected… Temperature Correction = 0.0 C Record Count = XXXXX DOWNLOADING Start Date: 21-05-19 Time 15:30 Maximum Sample Temp = 3.0 C Minimum Sample Temp = 3.0 C Mean Sample Temp = 3.0 C 21-05-19 15:35 3.0, 3.0, 3.0, 2.9, 2.9. 3.0, *[more temperatures etc.]* Download Complete
∗c	Instructs the Sampler to cancel the current download. Once a download has started, if taking too long entering ∗c will cancel that download

5 MAINTENANCE

General **5.3**
Removing / Refitting the Sample Chamber
Cleaning Sample Tract (Intake Hose and Sample Chamber)
Changing Desiccant Bag
Lubricating Pinch Valve Piston
Clearing Intake and Exhaust Vents
S300 Condensate Drain (where fitted)

Troubleshooting **5.7**
General Operational Troubleshooting
Sampler Warning Message Troubleshooting
Beacon Indications

Test Mode **5.11**

Service Support **5.13**

General

Routine user maintenance on your Aquacell Sampler is made as minimal as possible. It is however strongly recommended that regular preventative maintenance is carried out by an Aquamatic Certified Engineer. Please contact Aquamatic offices for details of annual Maintenance Contracts under which this work can be carried out

It is good policy to maintain the Sampler and its accessories in a generally clean condition bearing in mind the potential infection hazards associated with wastewater

NOTE: Suitable PPE must be worn when handling / cleaning your Aquacell Sampler

Removing / Refitting the Sample Chamber

Removing and refitting the Sample Chamber is necessary when carrying out a number of different operations. It is therefore useful to become familiar with this simple operation

1. Remove Intake Hose
2. Release retaining clip at right side of Top Clamp

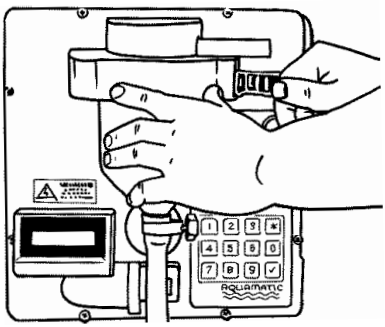

3. Hinge open Top Clamp whilst gripping Sample Chamber Top Pipe to ensure Sample Chamber stays in place
4. Gripping Sample Chamber Top Pipe with one hand and Sample Chamber with the other carefully release the assembly from the Top Clamp
5. Carefully remove the Sample Chamber Top assembly from the Sample Chamber assembly using the top pipe as a lever
6. Carry out the above procedure in reverse order to replace the Sample Chamber

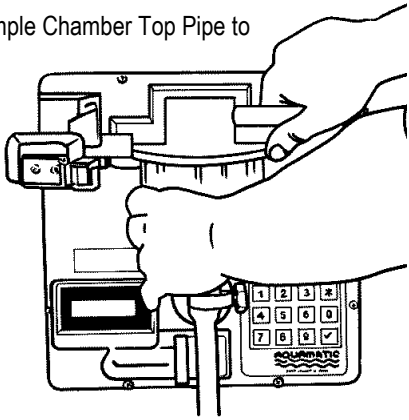

Cleaning Sample Tract (Intake Hose and Sample Chamber)

As with all Aquacell Sampler models, in the interests of minimising sample contamination the Sample Tract (Intake Hose and Sample Chamber) should be kept clean. The method adopted to clean the sample tract will depend on how sensitive the application is to cross contamination

Most parts of the sample tract are easily accessible and can be cleaned with a detergent and / or a cream cleaner such as 'CIF' using a suitable brush

Inaccessible parts of the sample tract are usually flushed out with clean water. Where the Sampler has to be completely free from the contamination of previous sampling operations then replacement of inaccessible parts is the only option

The frequency of cleaning will depend very much on the application. Operational experience with the Aquacell Sampler will enable you to decide how frequently the sample tract should be cleaned in order to ensure that reliable and representative samples are always collected

The parts of the sample tract which need to be kept clean are as follows:

- Intake Hose assembly – Loosen hose clamp to remove. Either flush out with clean water or replace
- Sample Chamber / Chamber Top
  When cleaning the Sample Chamber Top it is important to ensure that the inside surface, particularly between the electrode pins, is kept free of wastewater contamination. Wastewater deposits can form a conductive path between the electrode pins which may lead to the occurrence of CLEAN CHAMBER TOP and / or GUARD PROBE HIT faults. A test for conductive build-up on the Sample Chamber Top is detailed in the 'Test Mode' subsection later in this section
  a) To clean the Sample Chamber Top firstly remove the Sample Chamber assembly as detailed in 'Removing / Refitting the Sample Chamber' earlier in this section
  b) Clean the Sample Chamber with a cleaning sponge using a detergent solution followed by a clean water rinse. Stubborn deposits may require a more aggressive cleaner

c) Clean the sample Chamber Top in a similar manner but using brushes instead of a sponge. A small diameter bottle brush or similar can be used to clean the inside of the horizontal top pipe, and the silicone Volume Control Tube

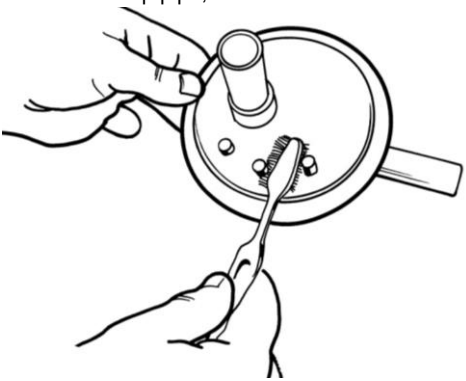

d) A small toothbrush (or similar) can be used to reach the base of the 3 electrodes and the inside surface of the Chamber Top between the electrodes. Clean the 3 electrodes both above and below the Chamber Top

e) Once cleaned retest the Sample Chamber Top to ensure that any conductive path is removed as detailed in the 'Test Mode' sub section later in this section

- Sample Collection Vessel - The method used to clean the Sample Collection Vessel will vary depending on which format is purchased:

2.5 / 5 / 10 litre HDPE Bottles

Clean with a brush using detergent solution, followed by a clean water rinse

25 litre Polyethylene Container

Remove the central access disc for cleaning. Clean with a brush using detergent solution, followed by a clean water rinse

0.75 litre Glass Bottles

Either clean in a bottle washer or replace

1 litre P.E.T. Bottles

Either flush with clean water or replace

1 litre Polypropylene Containers

Clean with a brush using detergent solution followed by a clean water rinse

Bottler Distributor Pipe

Force the Distributor Pipe out of its white retaining clip. Clean with a brush using detergent solution, followed by a clean water rinse

Changing Desiccant Bag

It is important to ensure that electronic / electrical hardware inside the sealed Sampler Module remains dry. As such periodically it may be necessary to change the Desiccant Bag inside your Aquacell Sampling Module. To do this proceed as follows:

- Switch off and isolate the Sampler module
- Remove Sample Chamber / Top assembly (see removing / refitting the Sample Chamber)
- Remove rubber Desiccant Bag access plug from Sampler Module Front Panel
- Withdraw Desiccant Bag and discard in suitable waste disposal bin
- Remove new Desiccant Bag from its sealed bag and push into Front Panel
- Replace the rubber Desiccant Bag access plug

Lubricating Pinch Valve Piston

Occasionally it may be necessary to lubricate the Pinch Valve Piston, this should be carried out using the appropriate lubricant as follow *:

- For 'Pinch Valve Piston – Series 2' (black) use 'Silicone Grease – 25g' (CL-6179) *
- For 'Pinch Valve Piston – Series 1' (red) use 'Pinch Valve Grease – Series 1 – 25g' (CL-6140) *

* Caution – Using the incorrect grease is likely to cause damage to the Sampler Module

A small deposit of grease should be applied to the Pinch Valve Piston shaft and spread over the working surfaces by manually moving it in and out

Clearing Intake and Exhaust Vents

The Intake and Exhaust Vents to the rear of the Sampler Cabinet must be kept clear, particularly the S320H model where an unimpeded air flow is essential to maintain efficient operation of the cooling system. This is achieved by regularly cleaning the Vents to remove any accumulated debris. Brushing the Vents will usually be carried out with the Air Cowls in place, by backing off the thumb screw on the right hand side of the Air Cowl Cover to allow the Cover to swing up on its hinge (see image below). Holding the Cover open with one hand allows access to clean the Vents with a brush or vacuum cleaner

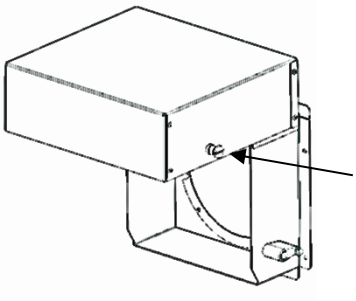

Back off this thumb screw to allow the cover to swing open and therefore exposing the vent for the purposes of cleaning

For additional Vent access it is possible to remove the Air Cowls completely, this is done by removing the screws which fix the Cowls to the rear of the Sampler Cabinet.

If a Vent has become badly contaminated, it may be preferable to replace it, in order to do this the Air Cowl must be removed for access (as above). Before removing the Vent itself the Sampler should be switched off and isolated. The Vent can then be removed by removing its perimeter fixing screws. The Vent should be replaced with one of the following:

- Vent – Intake (CL-6201) – The larger vent fixed to the rear of the Sampler Cabinet
- Vent – Exhaust (CL-6200) – The smaller vent fixed to the rear of the Sampler Cabinet

S300 Condensate Drain (where fitted)

The Aquacell S320H model is fitted with a Condensate Drain (unless a Wastewater Drain is specified). This is terminated in the 22mm O/D pipe stub at the bottom rear of the Sampler Cabinet. Regular checks should be made to ensure that this drain is unblocked by pouring a small quantity of water into the bottom of the Lower Compartment and ensuring that it flows out of the pipe stub. If a blockage is discovered, steps should be taken to clear it (using a bottle brush or other suitable implement)

Trouble Shooting

If your Sampler is not operating correctly check the symptoms against the following list. If you are unable to remedy the problem then refer back to Aquamatic Ltd or your local dealer (see Service Support section for details)

General Operational Troubleshooting

SYMPTOM	FAULT	ACTION / COMMENTS
1. No Display	a. Power off b. Electronic fault	a. Connect power b. Contact supplier for service advice
2. Reduced sample lift capability / transport velocity	a. Partially blocked sample tract b. Leaking top clamp pneumatic connector c. Leaking Chamber Top seal d. Leaking pinch valve (bubbles rising through pinch valve tube) e. Leaking intake hose, or intake filter connection (excessive bubbles entrained	a. Clean sample tract b. Replace 'O' ring, stub pipe c. Replace 'O' ring, Chamber Top d. Change pinch valve tube N.B. Often a new pinch valve tube will need to undergo several sample cycles before it seals properly e. Check connections and seal

	in water entering sample chamber) f. Pump inefficiency g. Internal pneumatic fault	f. Contact supplier for service advice g. Contact supplier for service advice
3. Sample shot sequence error	a. Purge times are incorrectly set b. Internal pneumatic / electronic fault	a. Check purge times and reset if necessary b. Contact supplier for service advice
4. Samples not being kept at required temperature	a. Vent blocked b. Lower Compartment door not fully closed c. Condensate and / or Wastewater Drain blocked d. Refrigeration System fault	a. Clean vents b. Close door and secure with clasp c. Unblock drain. See sub-section 'Cleaning' earlier in this section d. Contact supplier for service advice

Sampler Warning Message Troubleshooting

When Warnings initially occur a warning message will be momentarily displayed on the Samplers screen in the 'Full Form' format (see table below), when being reviewed in the Event Log they will display in the 'Event Log Form'. If a Warning occurs whilst a program is not running the message will only appear temporarily on the Sampler screen

MESSAGE	CONDITION	ACTION / COMMENTS
1. Display shows: Full Form: FAULT Event Log Form: OPEN CIRCT PROBE OPEN CIRCT and sample shot cycle aborts **Notes:** • This fault will not cause the program to abort. It will, however, prevent a program being initiated	a. Chamber not fitted b. One or more contact springs in front panel sample chamber assembly recess not connecting to its respective electrode c. Electronic fault	a. Fit chamber b. Clean tops of electrodes where contact is made with contact springs. See Cleaning Sample Tract / Stainless Steel Electrodes earlier in this Section N.B. Contacts springs should project about 6mm from their location holes c. Contact supplier for service advice

2. Display shows: Full Form: FAULT – CLEAN CHAMBER TOP Event Log Form: CLEAN CHTOP and sample shot cycle aborts **Notes:** • This fault will not cause the program to abort. It will, however, prevent a program being initiated	a. A conductive path is present between the 'common' central Level Sensing Probe and either one or both of the other two Level Sensing Probes prior to commencing the sample intake phase. This is probably due to effluent build up resulting from splashing during the intake phase b. Electronic fault	a. Clean Chamber Top. See Cleaning Sample Tract / Stainless Steel Electrodes earlier in this Section Review Sampler installation to ensure splashing does not occur during the intake phase. See Installation Section of this User Guide b. Contact supplier for service advice
3. Display shows: Full Form: FAULT GUARD PROBE HIT Event Log Form: GUARD HIT but sample shot cycle continues normally **Notes:** • This fault will not cause the program to abort. It will, however, prevent a program being initiated	a. Sample induction phase is terminated by short guard probe because long probes have become insulated due to contamination build-up b. Sample induction phase is terminated by short guard probe because wastewater is entering the Sample Chamber in a turbulent manner causing random triggering due to splashing	a. Clean Chamber Top. See Cleaning Sample Tract / Stainless Steel Electrodes earlier in this Section b. Check for air leaks in the Intake Hose. Ensure Intake Hose Filter is fully submerged in effluent channel
4. Display shows: Full Form: FAULT LOW VOLTAGE Event Log Form: LOW VOLTS and a shot is not acquired **Notes:** • This fault will not cause the program to abort	Supply voltage below minimum threshold	Restore adequate supply voltage
5. Display shows: Full Form: FAULT SHOT TIMED OUT Event Log Form: SHOT T/OUT and a shot is not acquired **Notes:** • This fault will not cause the program to abort	a. Intake filter is out of source effluent b. Channel is dry c. Blocked sample tract d. See Symptom 2 in 'General Operational Troubleshooting' table earlier in the Section	a. Ensure Intake Filter is fully immersed. See Installing Intake Hose (See Operation Section) b. Ensure effluent is present in channel whilst Sampling is in operation c. Clean Sample Tract (see Cleaning Sample Tract / Stainless Steel Electrodes earlier in this Section) d. No further action

6. Display shows: Full Form: FAULT BOTTLER FITTED Event Log Form: BOTT FITTED and a program is aborted	Bottler is connected to the Sampler but not specified in the program settings	Disconnect Bottler or reprogram Sampler
7. Display shows: Full Form: FAULT BOTTLER MISSING Event Log Form: BOT MISSING and a program is aborted	Bottler is not connected to the Sampler but is specified in the program settings	Ensure Bottler is fully connected to Sampler then recheck If fault persists contact supplier for service advice
8. Display shows: Full Form: FAULT BOTTLER FAILED Event Log Form: BOTT FAULT and a program is aborted	Sampler is not receiving correct signals from Bottler	Ensure Bottler is fully connected to Sampler, then recheck If fault persists contact supplier for service advice
9. Display shows: Full Form: FAULT - SAMPLE TEMP SENSOR Event Log Form: TEMP SNSR X and program is aborted	a. Temperature Sensor is not connected to the Sampler but is specified in the program settings b. Electronic fault	a. Connect Temperature Sensor or reprogram Sampler b. Contact supplier for service advice
10. Display shows: Full Form: FAULT - SAMPLE TRACT BLOCKED Event Log Form: TRACT BLKD and Sample is aborted	Some part of the Sample Tract is blocked causing an over pressure in the Sample Chamber during a pre or post purge	Check and remove any blockages from: • Intake Hose • Sample Chamber Top • Top Clamp breather orifice
11. Display shows: Full Form: BACK-UP BATTERY IN OPERATION Event Log Form: B BCK-UP ON	Appears where main power is lost with a Sampler being operated on mains with a float charged Back-Up battery option	Restore mains power supply
12. Display shows: Full Form: MAINS POWER RESTORED Event Log Form: PWR RESTORD	Appears where main power is restored with a Sampler being operated on mains with a float charged Back-Up battery option	None
13. Display shows: Full Form: Event Log Form: WARN LATCH	A Sampler Warning has occurred and Special Option LATCH WARNING OP is set for AUTO OFF or MANUAL	None
14. Display shows: Full Form: Event Log Form: WARN T/OUT	A latched Sampler Warning has automatically timed out	None
15. Display shows: Full Form: Event Log Form: WARN DISAB	A latched Sampler Warning has been manually disabled	None

16. Display shows: Full Form FAULT PLANT COM LINK FAILED	Event Log Form PLANT COM X	Communications between Sampler PCB and Plant PCB have been interrupted	Contact Supplier for service advice
17. Display shows: Full Form PLANT ZONE TEMP SENSOR FAULT	Event Log Form PZT SNSR X	Fault with the temperature sensor in the Plant Zone	Contact Supplier for service advice
18. Display shows: Full Form EVAP PLATE TEMP SENSOR FAULT	Event Log Form EPT SNSR X	Fault with the temperature sensor on the Evaporator Plate	Contact Supplier for service advice
19. Display shows: Full Form CONTAINER ZONE TEMP SENSOR FAULT	Event Log Form CZT SNSR X	Fault with the temperature sensor in the Container Zone	Contact Supplier for service advice
20. Display shows: Full Form DEFROST TIME OUT	Event Log Form DFRST T/OUT	The conditions for a Defrost to complete have not been met	Contact Supplier for service advice
21. Display shows: Full Form DEFROST COMPLETE	Event Log Form DFRST CMPLT	Following a 'DEFROST TIME OUT' the conditions for a Defrost to complete have subsequently been met	None

Beacon Indications

When fitted the 2 stage Beacon indicator will react to the above Sampler Warnings as follows:

Green indicator static	Power on. No program running
Green indicator flashing	Program running
Red indicator flashing	Warning(s) have occurred Note: Warnings occurring during a running program can be cancelled by pressing 'VIEW' button on the sampler module keypad

Test Mode

The Sampler has a Test Mode which is very useful in helping to diagnose fault conditions both within the Sampler and in its peripheral equipment. The Test Mode can also be useful during the commissioning of a Sampler

Use '∗' button to step from one test to the next. To return to the normal operating mode press 'SET PROG' button

DISPLAY	COMMENTS
AQUACELL READY	Press and hold 'STOP' button to enter Test Mode
total shots 0000000001	Records total number of sample shots taken by the Sampler since 0000000001 its date of manufacture. This display only shows briefly
test pump ∗ [test finished]	Press ✓ button to exercise pump. Listen for uneven running or any spurious noises
test level det ∗ 0514 [test finished]	Press ✓ button to check main level probe Reading should be in the range 0507 to 0517 A reading below this range suggests that a conductive path exists between the 2 long electrodes. This probably means that the inside of the Sample Chamber Top needs cleaning A reading above this range suggests a bad contact between one or more of the spring contacts and its corresponding electrode
test guard elec ∗ 0515 [test finished]	Press ✓ button to check guard level probe Reading should be in the range 0507 to 0517 A reading below this range suggests that a conductive path exists between the centre electrode and the short electrode. This probably means that the inside of the sample Chamber Top needs cleaning A reading above this range suggests a bad contact between one or more of the spring contacts and its corresponding electrode
test pwr supply ∗ 12.10 [test finished]	Press ✓ button to check power supply under load On AC power reading should be in the range 11.30 to 13.50

test sv valves ∗ [driving valve 1] [driving valve 2] [driving valve 3] [test finished]	Press ✓ button to check solenoid valves 1 to 3 in turn Listen for 3 clicks as valves automatically energise in turn
test acquired op ∗ [test finished]	Press ✓ button to drive the Sample Acquired output Contact closure should be detected on yellow and brown cores of Ancillary Signal Cable
test warning op ∗ [test finished]	Press ✓ button to drive the Sampler Malfunction output Contact closure should be detected on white and violet cores of Ancillary Signal Cable
test bottler ∗ [test finished]	Press ✓ button to drive Bottler around to 'Bottle 1' position When the Bottler reaches the 'Bottle 1' position the display will show: 'bottler homed∗' then 'test finished' If the bottler is not operating correctly (or is not connected) the display will show: 'BOTTLER FAILED∗' then 'test finished'
test impulse ∗ 00001 [test finished]	Press ✓ button to show impulse counter Providing a contact closure between red and black cores on Ancillary Signal Cable should increment counter
test 4-20 loop ∗ 0001 [test finished]	Press ✓ button to show 4-20mA input signal representation Feeding 4-20mA current signal via blue core (positive) and red core (negative) on Ancillary Signal Cable should display readings within the following ranges: 4mA (no flow) 0808-0828 12mA (half scale flow) 0399-0419 20mA (full scale flow) 0000-0010
test remote in ∗ input open [input closed] [test finished]	Press ✓ button to show remote input display Contact closures between green and black cores on Ancillary Signal Cable should switch display
temp correction ∗ 24.0ºC [test finished]	Press ✓ button to show temperature probe correction screen With Temperature Probe immersed in a liquid, the temperature of which is monitored by a calibrated thermometer, adjust the Samplers displayed reading to match. Press button 2 ▲ to increase and button 8 ▼ to decrease reading

Service Support

There are no user serviceable parts on Aquacell Sampler apart from those mentioned earlier in this section. In the event of failure of a Sampler the following procedure should be followed:

1. Report the failure to Aquamatic Ltd or its approved Distributor. Often a telephone call or email is enough to resolve a perceived problem
2. If the problem cannot be resolved this way then there are 2 options:

   On-Site Support

   Following discussion with Aquamatic or its approved Distributor an Aquamatic Certified Engineer can be scheduled to attend site in order to assess and repair your equipment. This is often the easiest and most practical option, particularly when the fault lies somewhere other than within the upper plant / lower cabinet zones of your Sampler

   Returning a Sampler

   If the above solution is not possible then the Sampler can be returned to Aquamatic or its approved distributor. To do this, proceed as follows:

   a. Switch mains power off, isolate and disconnect Sampler from supply
   b. Disconnect all Ancillary cables e.g. flow meters connection
   c. Remove Intake Hose
   d. Remove the Cabinets 4 x Mounting Feet – S300
   e. Lift and position S300 cabinet on its transit pallet, insert and screw down a minimum of 2 x Mounting Feet – S300 as detailed in Section 3 – Installation 'Positioning and Connecting the Sampler'. Strap and wrap the cabinet suitable for transportation, using original packing is recommended to avoid potential transit damage
   f. Return to Aquamatic / its approved Distributor for assessment and repair

   Returning a removable Bottler

   a. Pack the Bottler in suitable packaging materials if possible. If necessary contact Aquamatic / its approved Distributor or your supplier who will arrange for a transit pack to be forwarded
   b. Return to Aquamatic / its approved Distributor for assessment and repair

Returning other hardware

Either pack in original packaging if available, or use suitable alternative packaging materials

NOTE: For all equipment being return to Aquamatic a Decontamination Certificate must be completed. This will be issued by Aquamatic on or before receipt of the equipment

Please ensure that all items are packed securely such that movement within the box is prevented during transit. Repair of transit damage is chargeable

6 TECHNICAL SPECIFICATION

Operation / Performance 6.3
Mechanical.....6.4
Power Supply 6.5
Optional Connections / Equipment.....6.6
Disposal 6.7
Standards Compliance 6.7

Operation / Performance

General usage	Aquacell Wastewater Samplers are **NOT** suitable for use in areas which have been classified as ATEX hazardous zones
Sample media suitability	Non-pressurised wastewater (unless specified with Pressurised Pipeline Interface)
Sample extraction method	Air pump vacuum system
Operating modes	Time 1 min to 100 hour sampling interval Flow Volt-free impulse or 4-20mA signal Event Externally triggered e.g. by pH meter
Maximum lift height	> 7 metres
Transport velocity	0.5 metres/sec (average at 7m lift)
Sample shot volume range	30-500ml (30-100ml when used with 12 Bottle Removable Bottlers, 30-300ml with PPI)

NOTE: Minimum volume may vary subject to application and Sample Chamber Top configuration

Sample shot cycle time	Approx. 30 seconds (with 4 metres lift)
Data logging	Up to approx. 1350 events can be logged and viewed on the Samplers LCD or downloaded via the optional Data Connection (CL-4006). Sample temperature can also be logged / downloaded when the optional Sample Temperature Monitoring connection is specified
Intake Hose	10 metre flexible braided PVC hose with Stainless Steel Intake Filter incorporating 5 x Ø12mm intake ports
Intake Hose purging	Air and residual effluent are purged pre and post sample intake
Sample tract diameter	12mm increasing to 16mm (22mm with Bottler) between sample intake and discharge
Maximum sample media temperature	60°C
Control panel	17 button keypad. Alpha numeric LCD
Humidity control	Desiccant bag with graduated Humidity Indicator visible on Sampler Front Panel

Sample Collection Vessels availability

1 x 2.5 litre HDPE Bottle	4 x 12 litre HDPE Bottler
1 x 5 litre HDPE Bottle	12 x 0.75 litre Glass Bottler
1 x 10 litre HDPE Bottle	12 x 0.75 litre Glass Bottler
1 x 25 litre MDPE Container	12 x 0.75 litre Glass Bottler
2 x 4.5 litre Self-Emptying Bottler	12 x 1 litre P.E.T. Bottler
2 x 4.5 litre Self-Emptying / Cleaning Bottler	24 x 1 litre HDPE Bottler
4 x 5 litre HDPE Bottler	

Note: Contact re-seller for full current list of options

Security

S310H & S320H	Padlockable Lower Compartment Door protecting against unauthorised tampering of collected samples **PLUS** padlockable Upper Protection Door protecting against unauthorised tampering with Sampler Module program or other components in this area

Ingress Protection Rating (S300 Cabinet with Door(s) closed)

Aquacell S310H	IP45
Aquacell S320H	IP45

Ambient operating temperature range

Aquacell S310H	-10°C to 50°C
Aquacell S320H	-10°C to 40°C

Mechanical

Dimensions

Aquacell S310H / S320H	H1460mm x W850mm x D910mm

Weight (excluding Power Option / Sample Collection Vessel)

Aquacell S310H	103kg
Aquacell S320H	120kg

Key materials of construction (standard setup)

Sample Chamber	Acrylic (Glass optional)
Sample Chamber Top	Polypropylene, Silicone rubber, UPVC, Stainless Steel
Sample Collection Vessels	Various materials: HDPE, MDPE, P.E.T., Glass (see Sample Collection Vessels above)
Intake Hose with Filter	PVC with polyester braid hose, Stainless Steel Intake Filter
Sampler Module	Polyurethane plastic casing mouldings,

	Polypropylene cover / Stainless steel hardware - EEE
S300 Enclosure	
Outer Cabinet structure:	Stainless Steel 304, Galvanised Steel pre-treated and finished with architectural white Polyester powder coating, Polystyrene
Lower Compartment:	Polyurethane foam insulation, High Impact Polystyrene - EEE
Bottler Distributor Unit	Acrylic dome (removable Bottlers), Polyurethane, Brass, Stainless Steel - EEE
Bottle Carrier (24x1 Removable)	Polypropylene, Nylon 6-6, UPVC, Stainless Steel hardware
Bottle Carrier (4 x Removable)	ABS, Stainless Steel hardware
Bottle Carrier (2 x Self-Emptying)	MDPE, UPVC, Stainless Steel hardware
Bottle Distribution Tray (12 x Removable)	Polypropylene, UPVC, Nitrile rubber, Stainless Steel hardware
Refrigerant (S320H)	R134A

Power Supply

Power Options

Mains AC (standard with all units)	110/120/220/230VAC @ 50/60Hz
Mains AC (as above) with Integral Float Charge Backup Battery	As above + 12VDC 7Ah Sealed Lead Acid Battery

Power consumption

Aquacell 310H	590VA @ 110VAC / 50Hz 490VA @ 220VAC / 50Hz 530VA @ 230VAC / 50Hz
Aquacell S320H	910VA @ 110VAC / 50Hz (with 24A max inrush) 765VA @ 220VAC / 50Hz (with 10.5A max inrush) 830VA @ 230VAC /50Hz (with 10.5A max inrush)

NOTE: For S300 Series Samplers with 'PPI – S300 Series' Pressurised Pipeline Interface, add 300VA to the above values

Optional Connections / Equipment

Ancillary Signal Connection

Remote control input	Inputs should be 'Normally Open' volt free. Minimum contact closure period >50ms
Analogue flow input	4-20mA into 255Ω
Digital pulsed flow input	Inputs should be 'Normally Open' volt free Minimum contact closure period >30ms followed by minimum opening period of >20ms
Sample acquired output	Normally open volt free contact (50VDC 1A). Contact closes when sample medium bridges level probes in Sample Chamber
Sampler warning output (not available in 'LOW POWER MODE')	Normally open volt free contact (50VDC 1A). Contacts held closed when system is powered and healthy. Contacts open when one or more of the following warning conditions occur:

1. Probe open circuit
2. Chamber Top is contaminated
3. Guard probe hit
4. Low supply voltage
5. Intake phase is timed out
6. Bottler is fitted but sampler is programmed for no Bottler
7. Bottler is not fitted but sampler is programmed for Bottler
8. Temperature Sensor (when optional Temperature Sensor is fitted)
9. Bottler failed
10. Power supply failed (where there is no Battery backup)
11. Ancillary signal cable open circuit
12. Sample Tract is blocked (when Blockage Detection System option is fitted)

Beacon (requires Ancillary Signal Connection)

INDICATOR	STATUS	COMMENTS
GREEN	Static ON	Power ON, no program running
GREEN	Flashing	Sampler program is running
RED	Flashing	Warning(s) occurred

Data Connection output
Requires Data Connection (CL-4006)

USB cable A-B connecting to suitable USB COM port. Requires serial port PC communication software

Self-Emptying Self-Cleaning Integral Bottler

Wash water temperature range	1-60˚C
Maximum water pressure	6 bar
Backflow prevention	Not fitted (User to provide if required)

Disposal

In the event that this equipment is being disposed of particular reference should be made to the 'Key Materials of Construction' earlier in this section. All parts must be disposed of in line with current UK regulations

Electrical and electronic equipment (EEE) contains materials, components and substances that can be dangerous and harmful to human health and the environment if the waste (WEEE) is not disposed of properly

Products that are labelled with a 'crossed-out wheelie bin' are electric and electronic equipment. The crossed-out wheelie bin symbolizes that waste of this type cannot be disposed of with unsorted waste, but must be disposed of separately

Standards Compliance

UK Environment Agency Standard

MCERTS Performance Standard for Continuous Water Monitoring Systems – Automatic Water Sampling Equipment Part 1

European Standard

EN16479:2014 Water Quality – Performance requirements and conformity test procedures for water monitoring equipment – Automated sampling devices (Samplers) for water and wastewater

UK Regulations

The fulfilment of the requirements set out in Schedule I of the **Electromagnetic Compatibility Regulations 2016** has been demonstrated, having applied the following standards:

BS EN 61000-6-3:2007
Electromagnetic compatibility (EMC). Generic standards. Emission standard for residential, commercial and light-industrial environments

BS EN 61326-1:2013
Electrical equipment for measurement, control and laboratory use. EMC requirements. General requirements

The fulfilment of the safety objectives for equipment referred to in Part 1.3 and set out in Schedule I of the **Electrical Equipment (Safety) Regulations 2016** has been demonstrated, having applied the following standards:

BS EN 61010-1:2010
Safety requirements for electrical equipment for measurement, control and laboratory use. General requirements

It has been demonstrated that the requirements specified in **The Restriction of the Use of Certain Hazardous Substances in Electrical and Electronic Equipment Regulations 2012** has been met

EU Directives

The fulfilment of the requirements set out in Annex I of the **Electromagnetic Compatibility Directive (EMC) 2014/30/EU** has been demonstrated, having applied the following standards:

BS EN 61000-6-3:2007
Electromagnetic compatibility (EMC). Generic standards. Emission standard for residential, commercial and light-industrial environments

BS EN 61326-1:2013
Electrical equipment for measurement, control and laboratory use. EMC requirements. General requirements

The fulfilment of the safety objectives referred to in Article 3 and set out in Annex I of the Low Voltage Directive (LVD) 2014/35/EU has been demonstrated, having applied the following standard:

BS EN 61010-1:2010
Safety requirements for electrical equipment for measurement, control and laboratory use. General requirements

It has been demonstrated that the requirements specified in Article 4 of the **Restriction of Hazardous Substances Directive (RoHS) 2011/65/EU** has been met

ISO International Standard

Generally in accordance with:

ISO 5667–10 : 1992
Water quality - Sampling: Guidance on sampling of waste waters

European & International Standards

See Operation / Performance Section for ratings:

EN 60529 : 1992 + A2 : 2013
IEC 60529 : 1989 + A2 : 2013
Degrees of protection provided by enclosures (IP Code)

Established in 1991, Aquamatic Limited is a leading manufacturer of automatic Wastewater Sampling Equipment, based in Manchester, United Kingdom. The company and its product range benefit from over 50 years experience in the wastewater sampling industry

From the outset the Aquamatic philosophy has been to focus strictly on the design and manufacture of uncomplicated, robust and reliable wastewater sampling equipment. By remaining committed to this goal, Aquamatic now offer a true leading edge range of products suitable for the worldwide market

Available both direct from Aquamatic in England and around the world via a network of local distributors, Aquamatic equipment is accessible globally to any company with a requirement for high quality, dependable Wastewater Sampling Equipment

Aquamatic Limited

Irlam Business Centre Soapstone Way

Irlam Manchester M44 6GP UK

+44(0)161 777 6607

sales@aquamaticsamplers.com

service@aquamaticsamplers.com

www.aquamaticsamplers.com

mCERTS
THE ENVIRONMENT AGENCY'S MONITORING CERTIFICATION SCHEME
Sira MC 050059

AQUAMATIC
Wastewater Samplers for the World